LPS

WE HELP CREATE

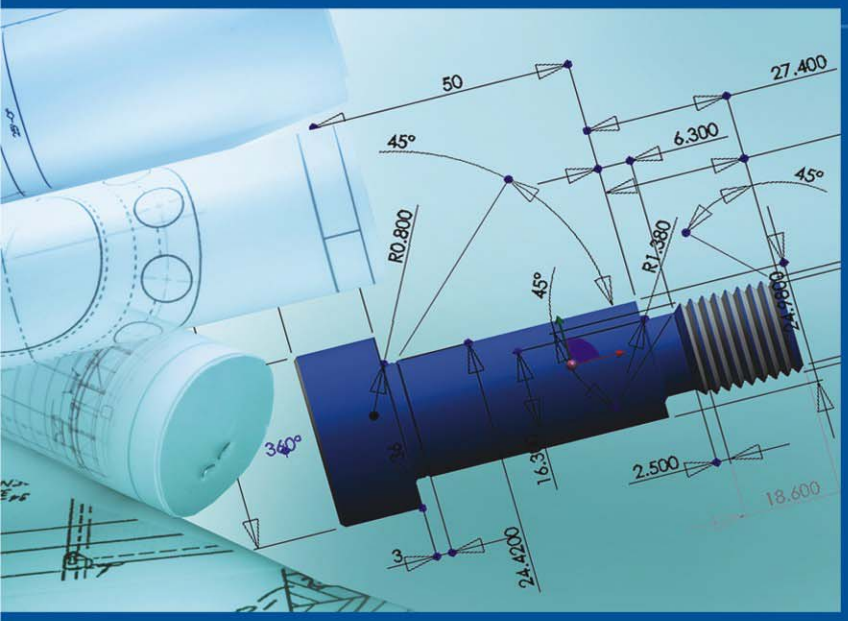

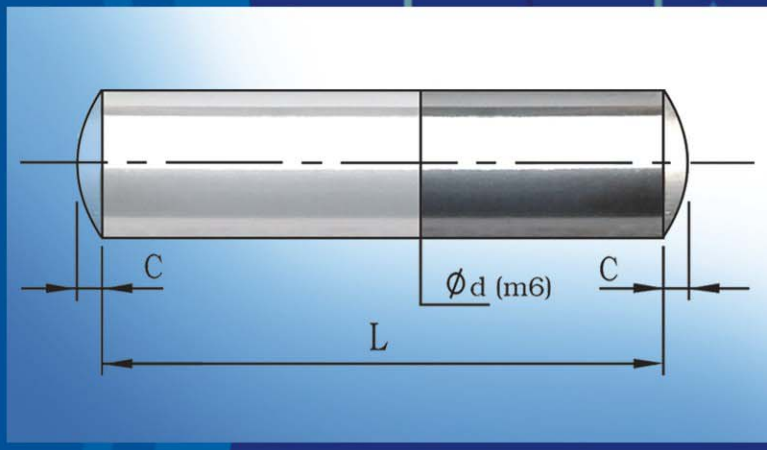

LAKSHMI PRECISION SCREWS LTD. (INDIA)

Certificates

LPS
WE HELP CREATE

Lakshmi Precision Screws Ltd.

LPS
WE HELP CREATE

rjain@lpsboi.com

exportsales@lpsboi.com

At Lakshmi Precision Screws Ltd. fastening technology is our core business and customer service is our guiding principle. Founded in March 1972, LPS is one of the leading manufacturer for Fasteners in all the segments like Automotive, Aerospace & Defence, Agriculture & Implements, Wind Energy, Locomotive, Tool & Die, Machineries, Oil & Gas, Industrial, Construction & Implements, Power Transmission & Distribution etc.

Today LPS has penetration into Indian market and also into deep North America, European & Asian Markets etc.

Headquarters at Rohtak (Haryana), 60 kms. North West from New Delhi. The Company has 4 manufacturing units across an area of 125,000 square meters with an installed capacity of 28,000 metric tons.

LPS constantly researching to improve the quality of our products to meet the increasing expectations of our customers and we are grateful to them for their continued guidance and patronage.

EXPANDING HORIZONS

LPS derives its strengths and experience from manufacturing high quality grade 12.9 socket head cap screws for last three decades. LPS capability meets the stringent quality systems laid down by large and reputed automotive, heavy-duty engines and wind energy companies. Some of the competencies and capabilities speak of confidence with transmission fasteners, engine fasteners, marine engines, high temperature fasteners, enduring high fatigues strength fasteners, wind turbine and its foundation bolts.

LPS has gained the capability in manufacturing Titanium Fasteners and Nickel Alloy Fasteners used in Aerospace and other programs.

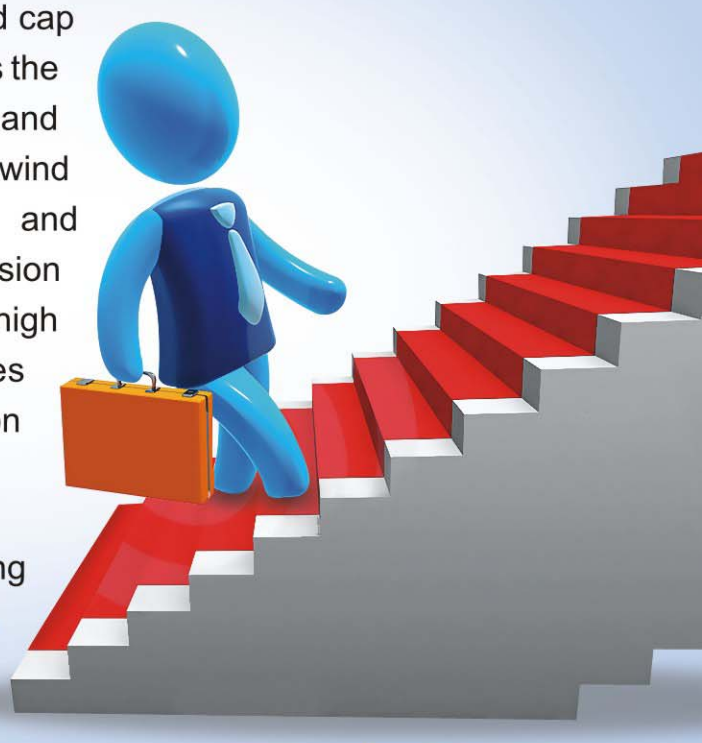

THE STORY SO FAR...

- 12.9 Socket Head Cap Screw
- Automotive Wheel Bolts & Hub Bolt
- Chasis Transmission & Engine
- High Temperature Turbo Charger Fastener for Marine Engine
- Cold Forge Components
- Wind Energy High Alloy
- Aerospace Titanium Alloy, Nickel Alloy & Inconel

JOINING FORCES WITH THE BEST IN THE WORLD

Being registered as a Public Limited Company since 1984. LPS has formed alliances with several Indian and global companies to streamline its processes to match the world's best. It all started with a technical tie-up with a reputed West German Company and today includes major collaborations with global giants in the industry.

LPS-BOSSARD Pvt. Ltd. is a joint venture between LPS and Bossard-AG of Switzerland. This alliance was formed to create state-of-the-art fastening solutions and technology for customers in India.

TORX ® & TORX PLUS ® a proprietary product of Acument intellectual properties LLC, this drive system is specifically designed to provide simple, cost effective solutions to the problems inherent in the process of installing and removing fasteners.

Asyst Technologies LLC is located near Chicago. USA having a modern 42.000 sq. feet climate controlled manufacturing facility. Their engineering and design expertise covers a variety of industries with a focus on automotive.

EJOT DELTA PT ® self tapping fasteners for plastics have been developed based on several years of experience and market leadership in screw joint technology for thermoplastic materials. These fasteners are safe and reliable even when they're used for extremely rigorous applications.

The Recoil thread repair systems are manufactured by Alcoa fastening Systems in one of their plants in Australia. This is a simple, cost effective system for repairing or creating stronger threads. This company ensures global consistency of quality and design standards in making wire threads inserts, STI Taps, tooling and thread repair kids etc.

For professionals who look for the highest quality in their products, the Flowdrill system provides a cost saving and problem solving production method for the formation of bushes in malleable metals.

DORKEN develops, manufactures and configures extremely effective surface protection treatments for the automobile and other industries sectors. The coatings are cadmium, lead and chromium VI free having no hydrogen embrittlement and low curing temperature.

LPS

WE HELP CREATE

WE WIN AT EVERY STAGE OF PRODUCTION

LPS is known for its dedicated services and quality products. We have a team in place that does not only believe in sowing the right seeds but also believes in reaping the benefits. Which is why we emerge as winners always!

The LPS R&D team of professionals has repeatedly won customer recognition for resolutely working towards innovating new designs and improving the quality of LPS products. The R&D centre of LPS connects the product development of our customers with its knowledge about characteristics, applications, innovative use and method of production. We put continuous emphasis on product and process improvement. This is the only way to achieve our aim of 'zero defects'.

OUR STRENGHTS

- We have a NABL certified Lab, and use Tools such as CAD, FEA and cold forming simulations.
- We create and test products made of new materials such as Medium Carbon Alloy steels with Cr / Mo / Ni / V and Nonmagnetic light metal alloys.
- We have technological collaborations with external partners for latest coating technologies.
- Surface defects are taken care of through training processes & special material handling process.

Socket Shoulder Screws

Shoulder Screws are fasteners with an unthreaded shank. The unthreaded shank is higher when compared to its threaded diameter, which is located under the head. Shoulder screws can be used to attach one machine part to another, or as a plain bearing in places where rotary or sliding motion is required. Shoulder Screws can be made from Steel or Stainless Steel, and are often heat-treated with a black oxide finish.

Although suppliers of shoulder screws use different naming conventions, there are several basic types of products. Examples include locating screws, **Socket Shoulder Screws, Stripper Bolts, Socket Head Shoulder Screws, Shoulder Bolts and Swing Bolts or Latch Bolts.**

Applications Shoulder Screws

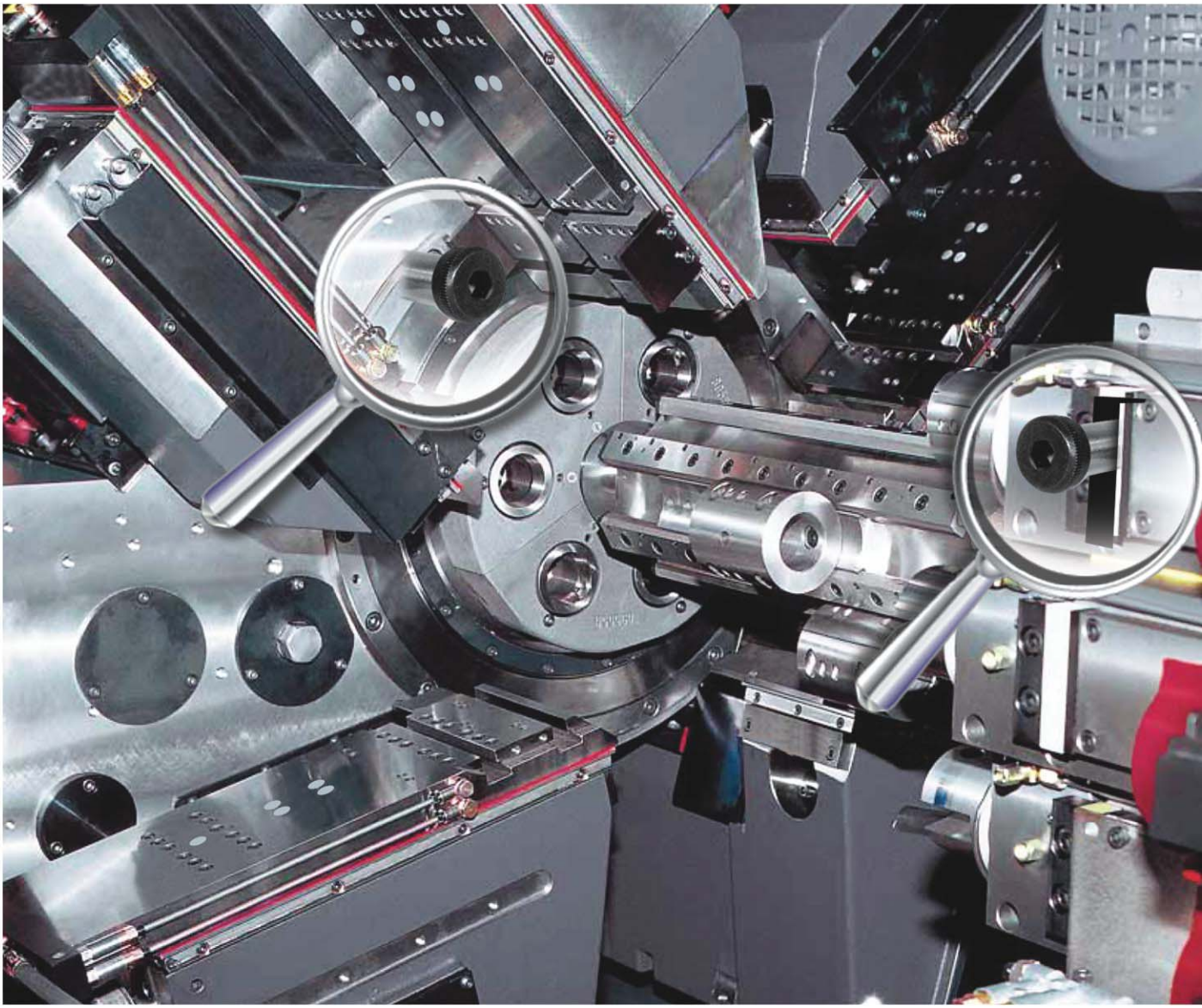

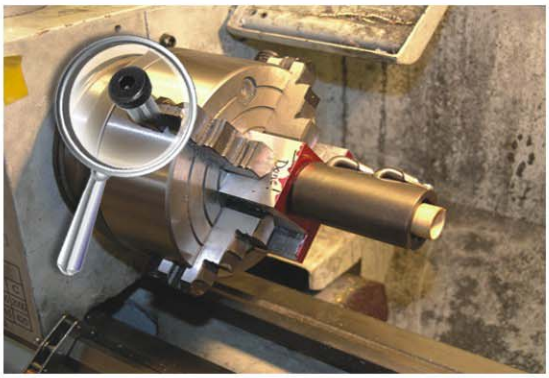

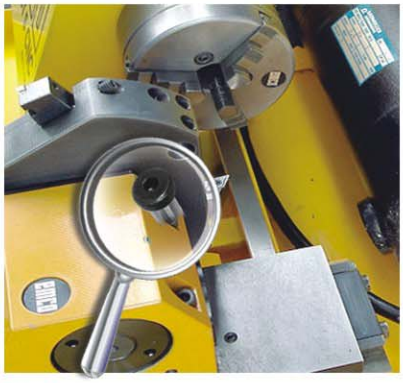

Applications Shoulder Screws

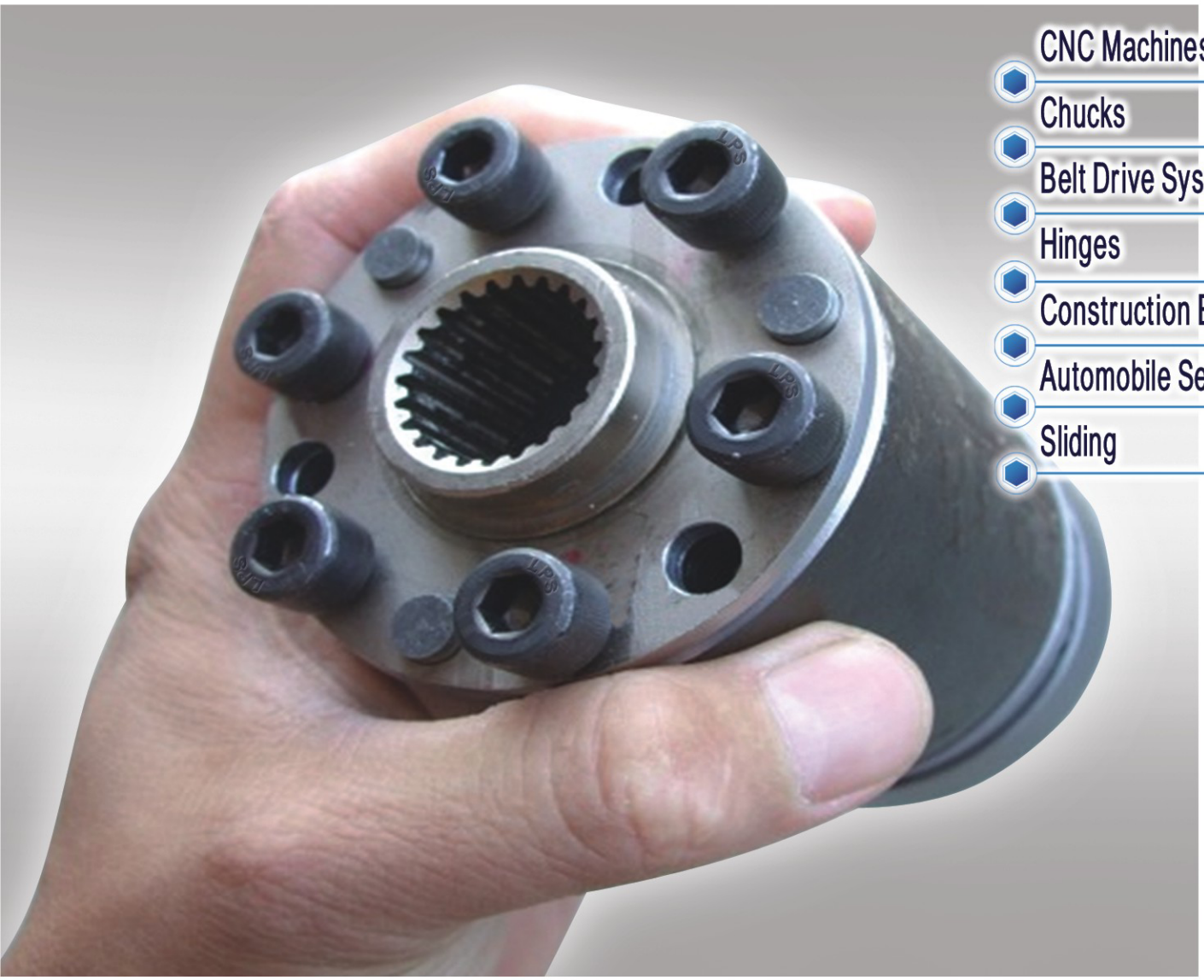

- CNC Machines
- Chucks
- Belt Drive System
- Hinges
- Construction Equipment
- Automobile Seats
- Sliding

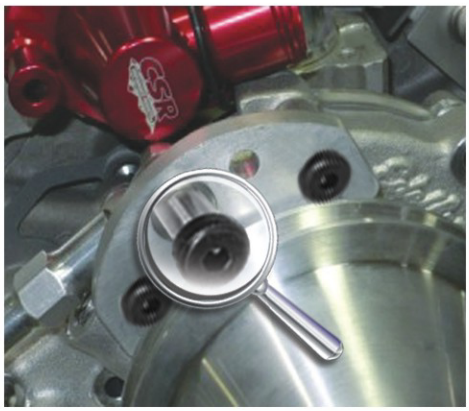

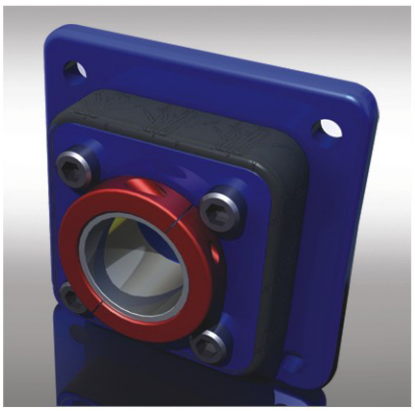

ISO 7379-1983 Hexagon Socket Shoulder Screws-Alloy Steel

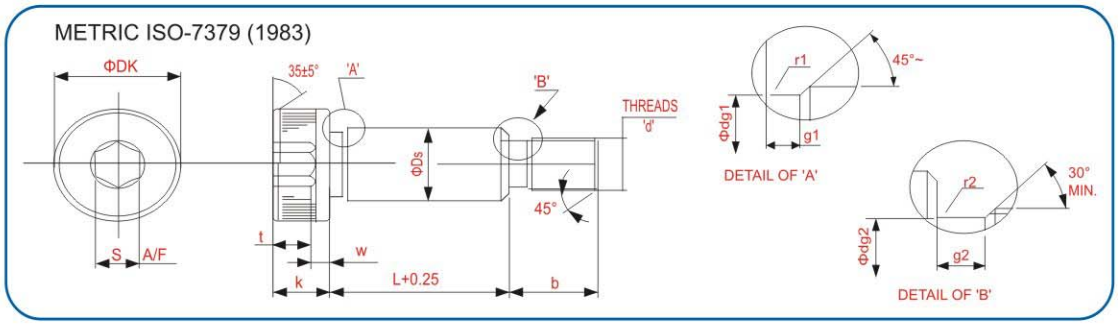

Range & General Specification

Product Standard	**ISO 7379-1983 (For Shoulder Dia Less Than 6.0MM Refer LPS NORM 1016)**
Mechanical Property Class	012.9 - (39-43 HRC) As per ISO 898-Part1 (However 010.9 class can be supplied against specific requirement)
Surface Finish	Shoulder as GROUND Finish and other surface as Thermal Blackened. Over all Surface Coating of Geomet or, Dacro, or Zinc Flake etc, can be provided against specific requirement.
	Electro Zinc Plating as per ISO 4042 is not advisable due to hazard of residual of Hydrogen Em-brittlement, even baking for 8 hours after Zinc Plating.

Shoulder Dia " Ds "	Nominal	*6.0	6.5	8.0	10.0	*12.0	13.0	16.0	20.0	*24.0	25.0
Length	6	LPS	LPS								
	8			LPS							
	10	Std	Std		LPS						
	12			Std		LPS	LPS				
	16				Std			LPS			
	20								LPS		
	25										
	30							Std		LPS	LPS
	35										
	40	Std							Std		
	45										
	50			Std						Std	Std
	60										
	70										
	80	LPS	LPS								
	90										
	100			LPS							
	110										
	120				Std	Std	Std	Std	Std	Std	Std
	130										
	140										
	150										
	160				LPS	LPS	LPS				
	180										
	200							LPS	LPS	LPS	LPS

Range : Standard ■ LPS ■

Dimension & Technical Specification

** Shoulder Dia "Ds, Tol. f9"	Nominal	***6.0**	**6.5**	**8.0**	**10.0**	***12.0**	**13.0**	**16.0**	**20.0**	***24.0**	**25.0**
	Max.	5.990	6.487	7.987	9.987	11.984	12.984	15.984	19.980	23.980	24.980
	Min.	5.960	6.451	7.851	9.951	11.410	12.941	15.941	19.925	23.928	24.928
	Max.After Coating***	6.055	6.555	8.055	10.055	12.060	13.060	16.060	20.065	24.065	25.065
Thread "d"	Thread Class "5g6g"***	M5 X0.8	M5 X0.8	M6 X1.0	M8 X1.25	M10 X1.5	M10X1.5	M12X1.75	M16X2.0	M20X2.5	M20X2.5
Thread Length "b"	Nominal	**9.50**	**9.50**	**11.00**	**13.00**	**16.00**	**16.00**	**18.00**	**22.00**	**27.00**	**27.00**
	Max.	9.75	9.75	11.25	13.25	16.40	16.40	18.40	22.40	27.40	27.40
	Min.	9.25	9.25	10.75	12.75	15.60	15.60	17.60	21.60	26.60	26.60
Head Dia "Dk"	Nominal	**10.00**	**10.00**	**13.00**	**16.00**	**18.00**	**18.00**	**24.00**	**30.00**	**36.00**	**36.00**
	Max.	10.22	10.22	13.27	16.27	18.27	18.27	24.33	30.33	36.39	36.39
	Min.	9.78	9.78	12.73	15.73	17.73	17.73	23.67	29.67	35.61	35.61
Head Height "k"	Nominal	**4.50**	**4.50**	**5.50**	**7.00**	**9.00**	**9.00**	**11.00**	**14.00**	**16.00**	**16.00**
	Max.	4.50	4.50	5.50	7.00	9.00	9.00	11.00	14.00	16.00	16.00
	Min.	4.32	4.32	5.32	6.78	8.79	8.78	10.73	13.73	15.73	15.73
Socket Size "s"	Nominal	**3.00**	**3.00**	**4.00**	**5.00**	**6.00**	**6.00**	**8.00**	**10.00**	**12.00**	**12.00**
	Max.	3.080	3.080	4.095	5.095	6.095	6.095	8.115	10.115	12.142	12.142
	Min.	3.020	3.020	4.020	5.020	6.020	6.020	8.025	10.025	12.032	12.032
Socket Depth "t"	Max.	3.32	3.32	4.17	5.18	6.99	6.98	8.73	10.53	12.48	12.48
	Min.	2.40	2.40	3.30	4.20	4.90	4.90	6.60	8.80	10.00	10.00
Wall thickness "w"	Min.	1.00	1.00	1.15	1.60	1.80	1.80	2.00	3.20	3.25	3.25
Shoulder Neck Detail	Dia "dg1" Max.	5.42	6.92	7.42	9.42	11.42	12.42	15.42	19.42	23.42	24.42
	Width "g1" Max.	2.50	2.50	2.50	2.50	2.50	2.50	2.50	2.50	3.00	3.00
	Radius "r1" Min.	0.25	0.25	0.40	0.60	0.60	0.60	0.60	0.80	0.80	0.80
Thread Neck Detail	Dia "dg2" Min.	3.68	3.68	4.40	6.03	7.69	7.69	9.35	12.96	16.30	16.30
	Width "g2" Max.	2.00	2.00	2.50	3.10	3.70	3.70	4.40	5.00	6.30	6.30
	Radius "r2" Min.	0.50	0.50	0.50	0.60	0.75	0.75	0.85	1.10	1.35	1.35
Tensile Load Based on Min Thread Neck Area	Newtons	12970	12970	18550	34840	56660	56660	75300	144800	229000	229000
Single Shear Load at Shoulder Neck	Newtons	27500	27500	31600	51000	74900	88600	129800	216800	315300	342800
Single Shear Load at Thread Neck	Newtons	7780	7780	11100	20900	33950	33950	47700	91700	145000	145000
Seating Torque	NM	6	6	10	26	54	54	88	235	460	460

Shoulder Diameter Sizes As Per Other Class Of Tolerance (ISO 7379)

Shoulder Dia "Ds, Tol. "h8"	Nominal	***6.0**	**6.5**	**8.0**	**10.0**	***12.0**	**13.0**	**16.0**	**20.0**	***24.0**	**25.0**
	Max.	6.000	6.500	8.000	10.000	12.000	13.000	16.000	20.000	24.000	25.000
	Min.	5.982	6.478	7.978	9.978	11.973	12.973	15.973	19.967	23.967	24.967
	Max. After Coating***	6.075	6.575	8.075	10.075	12.090	13.090	16.090	20.095	24.095	24.095
Shoulder Dia "Ds, Tol. "e9"	Max.	5.980	6.475	7.975	9.975	11.968	12.968	15.968	19.960	23.960	24.960
	Min.	5.950	6.439	7.939	9.939	11.925	12.925	15.925	19.908	23.908	24.908
	Max. After Coating***	6.045	6.545	8.045	10.045	12.045	13.045	16.045	20.045	24.045	25.045

Note :
- * Specification for Shoulder Diameter 6.0,12.0, & 24.0 are as per LPS norms in line with the standard as these sizes are not specified in ISO 7379.
- ** The tolerance (Tol. class "f9") on Shoulder diameter "ds" will be maintained before coating (Geomet, Dacromet) and maximum after Coating as per table.
- *** For Surface Coating like Geomet, Darcromet, Zinc Flake, the thread class will be "6e" before coating & "6h" Max.after coating. And Max Shoulder Dia as above tabulated.

ISO 7379-1983 Hexagon Socket Shoulder Screws-Stainless Steel

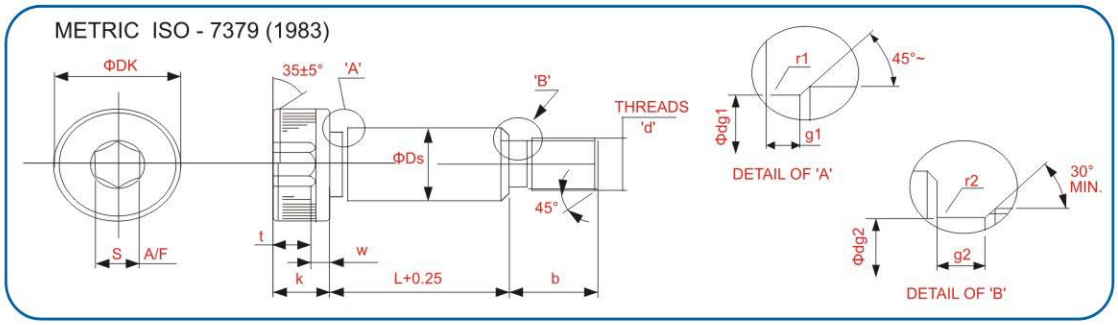

Range & General Specification of Stainless Steel

Product Standard	**ISO 7379-1983 (For Shoulder Dia Less Than 6.0 MM Refer LPS Norm 1016)**
Material	Austenitic Stainless Steel AISI 304 (A2) and AISI 316 (A4)
Surface Finish	Shoulder as GROUND Finish and other Surfaces Machined & Cold formed.

Shoulder Dia " Ds "	Nominal	*6.0	6.5	8.0	10.0	*12.0	13.0	16.0	20.0	*24.0	25.0
Length	6	■	■								
	8			■							
	10	■	■		■						
	12			■		■	■				
	16	■	■	■	■	■	■	■			
	20								■		
	25										
	30							■		■	■
	35										
	40	■	■						■		
	45										
	50			■						■	■
	60										
	70										
	80										
	90										
	100	■	■								
	110										
	120			■	■	■	■	■	■	■	■
	130				■		■				
	140										
	150										
	160										
	180										
	200										

Range : Standard ■ LPS ■

Dimension & Technical Specification

Shoulder Dia "Ds, Tol. f9"	Nominal	***6.0**	**6.5**	**8.0**	**10.0**	***12.0**	**13.0**	**16.0**	**20.0**	**24.0**	**25.0**
	Max.	5.990	6.487	7.987	9.987	11.984	12.984	15.984	19.980	23.980	24.980
	Min.	5.960	6.451	7.851	9.951	11.410	12.941	15.941	19.928	23.928	24.928
Thread "d"	Thread Class "5g6g"	M5 X0.8	M5 X0.8	M6 X1.0	M8 X1.25	M10 X1.5	M10X1.5	M12X1.75	M16X2.0	M20X2.5	M20X2.5
Thread Length "b"	Nominal	**9.50**	**9.50**	**11.00**	**13.00**	**16.00**	**16.00**	**18.00**	**22.00**	**27.00**	**27.00**
	Max.	9.75	9.75	11.25	13.25	16.40	16.40	18.40	22.40	27.40	27.40
	Min.	9.25	9.25	10.75	12.75	15.60	15.60	17.60	21.60	26.60	26.60
Head Dia "Dk"	Nominal	**10.00**	**10.00**	**13.00**	**16.00**	**18.00**	**18.00**	**24.00**	**30.00**	**36.00**	**36.00**
	Max.	10.22	10.22	13.27	16.27	18.27	18.27	24.33	30.33	36.39	36.39
	Min.	9.78	9.78	12.73	15.73	17.73	17.73	23.67	29.67	35.61	35.61
Head Height "k"	Nominal	**4.50**	**4.50**	**5.50**	**7.00**	**9.00**	**9.00**	**11.00**	**14.00**	**16.00**	**16.00**
	Max.	4.50	4.50	5.50	7.00	9.00	9.00	11.00	14.00	16.00	16.00
	Min.	4.32	4.32	5.32	6.78	8.79	8.78	10.73	13.73	15.73	15.73
Socket Size "s"	Nominal	**3.00**	**3.00**	**4.00**	**5.00**	**6.00**	**6.00**	**8.00**	**10.00**	**12.00**	**12.00**
	Max.	3.080	3.080	4.095	5.095	6.095	6.095	8.115	10.115	12.142	12.142
	Min.	3.020	3.020	4.020	5.020	6.020	6.020	8.025	10.025	12.032	12.032
Socket Depth "t"	Max.	3.32	3.32	4.17	5.18	6.99	6.98	8.73	10.53	12.48	12.48
	Min.	2.40	2.40	3.30	4.20	4.90	4.90	6.60	8.80	10.00	10.00
Wall thickness "w"	Min.	1.00	1.00	1.15	1.60	1.80	1.80	2.00	3.20	3.25	3.25
Shoulder Neck Detail	Dia "dg1" Max.	5.42	6.92	7.42	9.42	11.42	12.42	15.42	19.42	23.42	24.42
	Width "g1" Max.	2.50	2.50	2.50	2.50	2.50	2.50	2.50	2.50	3.00	3.00
	Radius "r1" Min.	0.25	0.25	0.40	0.60	0.60	0.60	0.60	0.80	0.80	0.80
Thread Detail	Dia "dg2" Min	3.68	3.68	4.40	6.03	7.69	7.69	9.35	12.96	16.30	16.30
	Width "g2" Max.	2.00	2.00	2.50	3.10	3.70	3.70	4.40	5.00	6.30	6.30
	Radius "r2" Min.	0.50	0.50	0.50	0.60	0.75	0.75	0.85	1.10	1.35	1.35
Tensile Load Based on Min Thread Neck Area	Newtons	6900	6900	9850	18500	30100	30100	41900	80800	127800	127800
Single Shear Load at Shoulder Neck	Newtons	8900	14600	16500	26900	39700	46900	68600	108900	158400	172200
Single Shear Load at Thread Neck	Newtons	4100	4100	5850	11050	17950	17950	25100	48400	76600	76600
Seating Torque	NM	2.5	2.5	4.5	12	25	25	38	98	190	190

Shoulder Diameter Sizes As Per Other Class Of Tolerance (ISO 7379)

Shoulder Dia "Ds, Tol. "h8"	Nominal	***6.0**	**6.5**	**8.0**	**10.0**	***12.0**	**13.0**	**16.0**	**20.0**	***24.0**	**25.0**
	Max.	6.000	6.500	8.000	10.000	12.000	13.000	16.000	20.000	24.000	25.000
	Min.	5.982	6.478	7.978	9.978	11.973	12.973	15.973	19.967	23.967	24.967
Shoulder Dia "Ds, Tol. "e9"	Max.	5.980	6.475	7.975	9.975	11.968	12.968	15.968	19.960	23.960	24.960
	Min.	5.950	6.439	7.939	9.939	11.925	12.925	15.925	19.908	23.908	24.908

Note : * Specification for Shoulder Diameter 6.0,12.0, & 24.0 are as per LPS norms in line with the standard as these sizes are specified in ISO 7379.

ANSI B 18.3-2002 Hexagon Socket Head Shoulder Screw-Alloy Steel

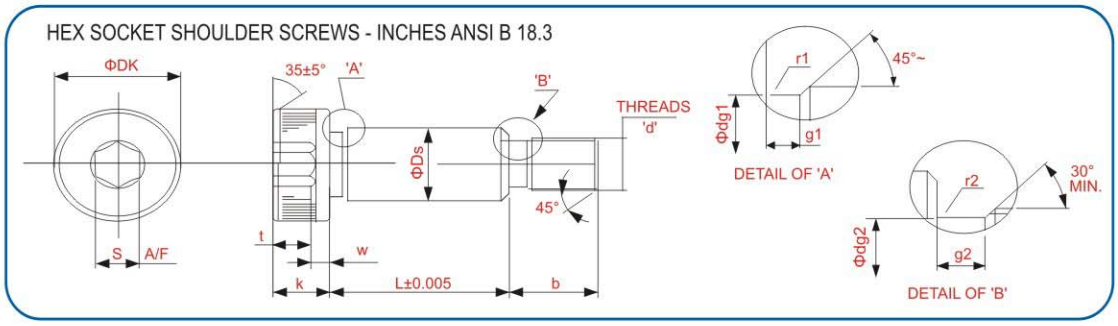

Range & General Specification

Product Standard	**ANSI B 18.3- 2002 (For Shoulder Dia Less Than 1/4 Refer LPS Norm 1005)**
Material	High Grade Alloy Steel (Hardness 37-43 HRC)
Surface Finish	Shoulder as GROUND Finish and other surfaces as Thermal Blackened Over all surface coating of Geomet or Dacro etc. can be provided against specific requirement.
	Electro Zinc Plating is not advisable due to hazard of residual of Hydrogen em-brittlement even baking for 8 hours after Zinc Plating.

Shoulder Dia " Ds "	Nominal	Φ1/4	Φ5/16	Φ3/8	Φ1/2	Φ5/8	Φ3/4	Φ1	Φ1 1/4
Length	1/8″	■							
	3/16″	■							
	1/4″	■	■						
	5/16″	■	■	■					
	3/8″	■	■	■	■				
	1/2″	■	■	■	■	■	■		
	5/8″	■	■	■	■	■	■		
	3/4″	■	■	■	■	■	■		
	7/8″	■	■	■	■	■	■		
	1	■	■	■	■	■	■	■	
	1-1/4″	■	■	■	■	■	■	■	■
	1-1/2″	■	■	■	■	■	■	■	■
	1-3/4″	■	■	■	■	■	■	■	■
	2	■	■	■	■	■	■	■	■
	2-1/4″	■	■	■	■	■	■	■	■
	2-1/2″	■	■	■	■	■	■	■	■
	2-3/4″	■	■	■	■	■	■	■	■
	3	■	■	■	■	■	■	■	■
	3-1/4″	■	■	■	■	■	■	■	■
	3-1/2″	■	■	■	■	■	■	■	■
	3-3/4″	■	■	■	■	■	■	■	■
	4″	■	■	■	■	■	■	■	■
	4-1/2″		■	■	■	■	■	■	■
	5		■	■	■	■	■	■	■
	5-1/2″			■	■	■	■	■	■
	6″			■	■	■	■	■	■
	6-1/2″			■	■	■	■	■	■
	7″			■	■	■	■	■	■
	7-1/2″				■	■	■	■	■
	8″				■	■	■	■	■
	8-1/2″								■
	9								■
	9-1/2″								■
	10								■

Range : Standard ■ LPS ■

Dimensional & Technical Specification

Shoulder Dia " Ds "	Nominal	**Φ1/4**	**Φ5/16**	**Φ3/8**	**Φ1/2**	**Φ5/8**	**Φ3/4**	**Φ1**	**Φ1 1/4**
	Max.	0.2480	0.3105	0.3730	0.4980	0.6230	0.7480	0.9980	1.248
	Min.	0.2460	0.3085	0.3710	0.4960	0.6210	0.7460	0.9960	1.246
Thread "d"	Thread Class	#10-24 UNC-3A	1/4-20 UNC-3A	5/16-18 UNC-3A	3/8-16 UNC-3A	1/2-13 UNC-3A	5/8-11 UNC-3A	3/4-10 UNC-3A	7/8-9 UNC-3A
Thread Length "b"	Nominal	**3/8**	**7/16**	**1/2**	**5/8**	**3/4**	**7/8**	**1**	**1 1/8**
	Max.	0.375	0.438	0.500	0.625	0.750	0.875	1.000	1.125
	Min.	0.355	0.418	0.480	0.595	0.720	0.845	0.970	1.095
Head Dia "Dk"	Nominal	**3/8**	**7/16**	**9/16**	**3/4**	**7/8**	**1**	**1 5/16**	**1 3/4**
	Max.	0.375	0.438	0.562	0.750	0.875	1.000	1.312	1.750
	Min.	0.357	0.419	0.543	0.729	0.853	0.977	1.287	1.723
Head Height "k"	Nominal	**3/16**	**7/32**	**1/4**	**5/16**	**3/8**	**1/2**	**5/8**	**3/4**
	Max.	0.188	0.219	0.250	0.312	0.375	0.500	0.625	0.750
	Min.	0.177	0.209	0.240	0.302	0.365	0.490	0.610	0.735
Socket Size "s"	Nominal	**1/8**	**5/32**	**3/16**	**1/4**	**5/16**	**3/8**	**1/2**	**5/8**
	Max.	0.1270	0.1587	0.1900	0.2530	0.3160	0.3790	0.5050	0.6310
	Min.	0.1250	0.1562	0.1875	0.2500	0.3125	0.3750	0.5000	0.6250
Socket Depth "t"	Max.	0.128	0.154	0.175	0.227	0.275	0.330	0.425	0.525
	Min.	0.094	0.117	0.141	0.188	0.234	0.281	0.375	0.469
Wall Thickness "w" (Not specified in ANSI B 18.3)	Min.	0.060	0.065	0.075	0.085	0.100	0.170	0.200	0.225
Shoulder Neck Detail	Dia "dg1" Min	0.227	0.289	0.352	0.477	0.602	0.727	0.977	1.227
	Width "g1" Max.	0.093	0.093	0.093	0.093	0.093	0.093	0.125	0.125
	Radius "r1" Min.	0.009	0.012	0.015	0.020	0.024	0.030	0.040	0.050
Thread Neck Detail	Dia "dg2" Min.	0.133	0.182	0.237	0.291	0.397	0.502	0.616	0.726
	Width "g2" Max.	0.083	0.100	0.111	0.125	0.154	0.182	0.200	0.222
	Radius "r2" Min.	0.017	0.022	0.025	0.029	0.036	0.045	0.049	0.056
Ultimate Tenile Load Based on Min Thread Neck Area	Pounds	2431	4553	7720	11639	21044	33647	50664	70374
Single Shear Load at Shoulder Neck	Pounds	4249	6888	10218	18764	29032	42341	76468	120609
Single Shear Load at Thread Neck	Pounds	1459	2732	4632	6983	12626	20188	30399	42224

ANSI B 18.3-2002 Hexagon Socket Head Shoulder Screw (Austenitic Stainless Steel AISI 304 & AISI 316)

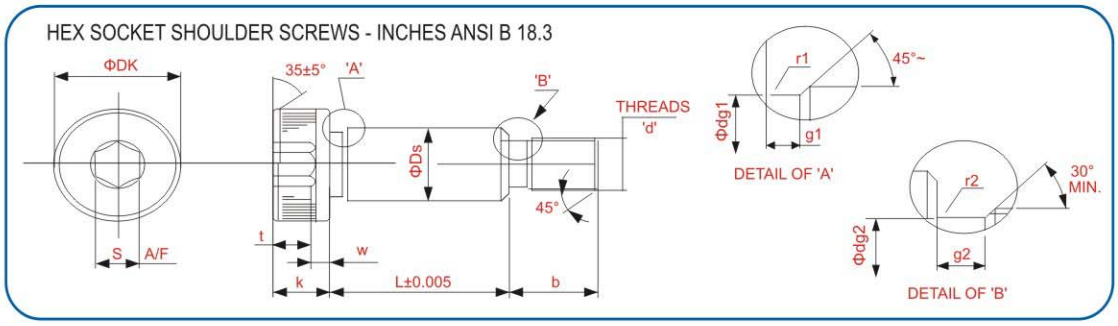

Range & General Specification

Product Standard	**ANSI B 18.3- 2002 (For Shoulder Dia Less Than 1/4 Refer LPS Norm 1005)**
Material	Austenitic Stainless Steel AISI 304 & AISI 316.
Surface Finish	Shoulder as GROUND Finish and other surfaces as Machined & Cold Formed.

Shoulder Dia " Ds "	Nominal	Φ1/4	Φ5/16	Φ3/8	Φ1/2	Φ5/8	Φ3/4	Φ1	Φ1 1/4
Length	1/8″	■							
	3/16″	■							
	1/4″	■	■						
	5/16″	■	■	■					
	3/8″	■	■	■	■				
	1/2″	■	■	■	■	■	■		
	5/8″	■	■	■	■	■	■		
	3/4″	■	■	■	■	■	■		
	7/8″	■	■	■	■	■	■		
	1	■	■	■	■	■	■	■	
	1-1/4″	■	■	■	■	■	■	■	■
	1-1/2″	■	■	■	■	■	■	■	■
	1-3/4″	■	■	■	■	■	■	■	■
	2	■	■	■	■	■	■	■	■
	2-1/4″	■	■	■	■	■	■	■	■
	2-1/2″	■	■	■	■	■	■	■	■
	2-3/4″	■	■	■	■	■	■	■	■
	3	■	■	■	■	■	■	■	■
	3-1/4″	■	■	■	■	■	■	■	■
	3-1/2″	■	■	■	■	■	■	■	■
	3-3/4″	■	■	■	■	■	■	■	■
	4″	■	■	■	■	■	■	■	■
	4-1/2″		■	■	■	■	■	■	■
	5		■	■	■	■	■	■	■
	5-1/2″			■	■	■	■	■	■
	6″			■	■	■	■	■	■
	6-1/2″			■	■	■	■	■	■
	7″			■	■	■	■	■	■
	7-1/2″				■	■	■	■	■
	8″				■	■	■	■	■
	8-1/2″								■
	9								■
	9-1/2″								■
	10″								■

Range : Standard ■ LPS ■

Dimensional & Technical Specification

Shoulder Dia " Ds "	Nominal	**Φ1/4**	**Φ5/16**	**Φ3/8**	**Φ1/2**	**Φ5/8**	**Φ3/4**	**Φ1**	**Φ1 1/4**
	Max.	0.2480	0.3105	0.3730	0.4980	0.6230	0.7480	0.9980	1.248
	Min.	0.2460	0.3085	0.3710	0.4960	0.6210	0.7460	0.9960	1.246
Thread "d"	Thread Class	#10-24 UNC-3A	1/4-20 UNC-3A	5/16-18 UNC-3A	3/8-16 UNC-3A	1/2-13 UNC-3A	5/8-11 UNC-3A	3/4-10 UNC-3A	7/8-9 UNC-3A
Thread Length "b"	Nominal	**3/8**	**7/16**	**1/2**	**5/8**	**3/4**	**7/8**	**1**	**1 1/8**
	Max.	0.375	0.438	0.500	0.625	0.750	0.875	1.000	1.125
	Min.	0.355	0.418	0.480	0.595	0.720	0.845	0.970	1.095
Head Dia "Dk"	Nominal	**3/8**	**7/16**	**9/16**	**3/4**	**7/8**	**1**	**1 5/16**	**1 3/4**
	Max.	0.375	0.438	0.562	0.750	0.875	1.000	1.312	1.750
	Min.	0.357	0.419	0.543	0.729	0.853	0.977	1.287	1.723
Head Height "k"	Nominal	**3/16**	**7/32**	**1/4**	**5/16**	**3/8**	**1/2**	**5/8**	**3/4**
	Max.	0.188	0.219	0.250	0.312	0.375	0.500	0.625	0.750
	Min.	0.177	0.209	0.240	0.302	0.365	0.490	0.610	0.735
Socket Size "s"	Nominal	**1/8**	**5/32**	**3/16**	**1/4**	**5/16**	**3/8**	**1/2**	**5/8**
	Max.	0.1270	0.1587	0.1900	0.2530	0.3160	0.3790	0.5050	0.6310
	Min.	0.1250	0.1562	0.1875	0.2500	0.3125	0.3750	0.5000	0.6250
Socket Depth "t"	Max.	0.128	0.154	0.175	0.227	0.275	0.330	0.425	0.525
	Min.	0.094	0.117	0.141	0.188	0.234	0.281	0.375	0.469
Wall Thickness "w" (Not specified in ANSI B 18.3)	Min.	0.060	0.065	0.075	0.085	0.100	0.170	0.200	0.225
Shoulder Neck Detail	Dia "dg1" Min.	0.227	0.289	0.352	0.477	0.602	0.727	0.977	1.227
	Width "g1" Max.	0.093	0.093	0.093	0.093	0.093	0.093	0.125	0.125
	Radius "r1" Min.	0.009	0.012	0.015	0.020	0.024	0.030	0.040	0.050
Thread Neck Detail	Dia "dg2" Min.	0.133	0.182	0.237	0.291	0.397	0.502	0.616	0.726
	Width "g2" Max.	0.083	0.100	0.111	0.125	0.154	0.182	0.200	0.222
	Radius "r2" Min.	0.017	0.022	0.025	0.029	0.036	0.045	0.049	0.056
Ultimate Tenile Load Based on Min Thread Neck Area	Pounds	1320	2471	4191	6318	11141	17813	26822	37257
Single Shear Load at Shoulder Neck	Pounds	2307	3739	5547	10186	15370	22416	40483	63852
Single Shear Load at Thread Neck	Pounds	792	1483	2515	3791	6684	10688	16093	22354

LPS Norm 1005 - Hexagon Socket Head Shoulder Screws

Hex Socket Shoulder Screws-Inches-Small Diameters in Line With ANSI B 18.3 (Alloy Steel & Stainless Steel)

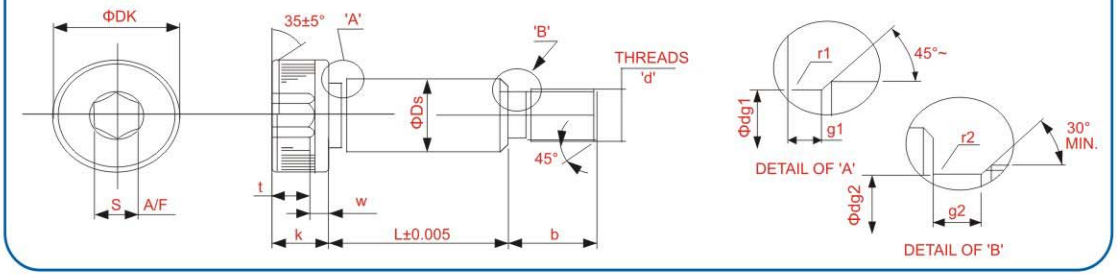

Range & General Specification

Product Standard	**LPS Norm 1005 (In line with ANSI B 18.3)**	
Material	High Grade Alloy Steel (Hardness 37-43 HRC).	
	Austenic Stainless Steel AISI 304 (Alloy Group 1) and AISI 316 (Alloy Group 2).	
Surface Coating	Alloy Steel Shoulder Screws	Shoulder as GROUND Finish and other surfaces as Thermal Blackened.
	Austentic Stainless Steel Shoulder Screws	Shoulder as GROUND Finish and other Surfaces as Machined.

Shoulder Dia " Ds"	**Nominal**	**Φ1/8**		**Φ5/32**		**Φ3/16**	
		Alloy Steel	Stainless Steel	Alloy Steel	Stainless Steel	Alloy Steel	Stainless Steel
Length	1/8″						
	3/16″						
	1/4″						
	5/16″						
	3/8″						
	1/2″						
	5/8″						
	3/4″						
	7/8″						
	1						
	1-1/4″						
	1-1/2″						
	1-3/4″						
	2						
	2-1/4″						
	2-1/2″						
	2-3/4″						
	3						

Range : Standard ■ LPS (Alloy Steel) ■ LPS (Stainless Steel) ■

Dimension & Technical Specification

Shoulder Dia "Ds"	Nominal	**Φ1/8**		**Φ5/32**		**Φ3/16**	
	Max.	0.1245		0.1556		0.1870	
	Min.	0.1235		0.1546		0.1857	
Thread "d"	Thread Class	# 4 - 40 UNC-3A		# 6 - 32 UNC-3A		# 8 - 32 UNC-3A	
Thread Length "b"	Max.	0.16200		0.1970		0.1970	
	Min.	0.1520		0.1840		0.1840	
Head Diameter "Dk"	Max.	0.2500		0.2820		0.3120	
	Min.	0.2420		0.2720		0.3030	
Head Height "K"	Max.	0.1250		0.1250		0.1590	
	Min.	0.1170		0.1170		0.1500	
Socket Size "s"	Nominal	**5/64**		**3/32**		**3/32**	
	Max.	0.0810		0.0958		0.0958	
	Min.	0.0783		0.0937		0.0937	
Socket Depth "t"	Min.	0.0640		0.0600		0.0780	
	Max.- (Calculated)	0.0770		0.0760		0.0980	
Wall Thickness "w" (Not specified in ANSI B 18.3)	Min.	0.0300		0.0310		0.0420	
Shoulder Neck Detail	Dia "dg1" Min.	0.110		0.138		0.1700	
	Width "g1" Max.	0.043		0.054		0.0540	
	Radius "r1" Min.	0.015		0.010		0.0070	
Thread Neck Detail	Dia "dg2" Min.	0.071		0.088		0.1130	
	Width "g2" Max.	0.043		0.043		0.0540	
	Radius "r2" Min.	0.013		0.025		0.0060	
		Alloy Steel	Stainless Steel	Alloy Steel	Stainless Steel	Alloy Steel	Stainless Steel
Ultimate Tensile Load Based on Min Thd. Neck Area	Pounds	695	376	1065	578	1755	953
Single Shear Load at Shoulder Neck	Pounds	998	542	1570	853	2383	1293
Single Shear Load at Thread Neck	Pounds	415	225	640	347	1054	572

LPS Norm 1016-Hexagon Socket Head Shoulder Screws

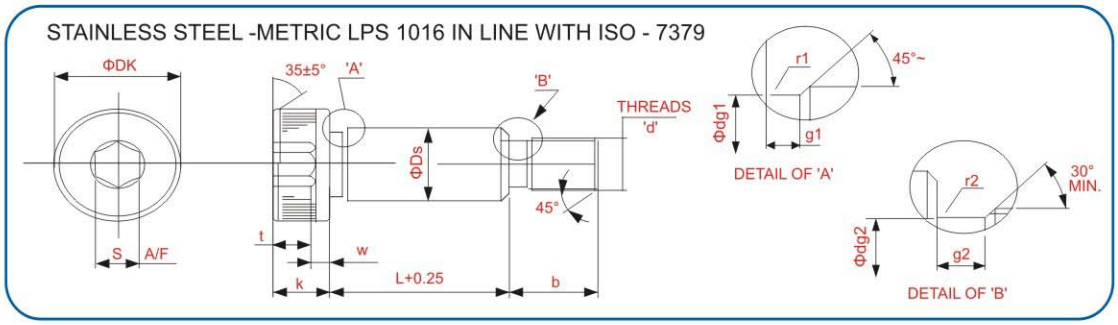

Range & General Specification

Product Standard	**LPS Norm 1016 (IN LINE WITH ISO 7379)**										
Material	012.9 - (39-43 HRC) as per ISO 898-1. Austenitic Stainless Steel AISI 304 (A2) and AISI 316 (A4).										
Surface Finish	Shoulder as GROUND Finish and other Surface Machined & Cold Formed.										
Shoulder Dia " Ds"	**Nominal**	**4.0**	**5.0**								
Length	**4**	■	■								
	5	■	■								
	6	■	■								
	8	■	■								
	10	■	■								
	12	■	■								
	14	■	■								
	16	■	■								
	20	■	■								
	25	■	■								
	30	■	■								
	35		■								
	40		■								
	45		■								
	50		■								
	60										
	70										
	80										

Range : Standard ■ LPS ■

Dimension & Technical Specification

Shoulder Dia " Ds"	Nominal	**4.0**	**5.0**
	Max.	3.990	4.990
	Min.	3.960	4.960
Thread "d"	Thd Class-6g	M3 X 0.5	M4 X 0.7
Thread Length "b"	Nominal	**7.00**	**8.00**
	Max.	7.35	8.35
	Min.	6.65	7.65
Head Dia "Dk"	Max.	7.00	9.00
	Min.	6.64	8.64
Head Height "K"	Max.	3.00	4.00
	Min.	2.78	3.78
Socket Size "A/F"	Nominal	**2.00**	**2.50**
	Max.	2.07	2.58
	Min.	2.01	2.51
Socket Depth "t"	Min.	1.60	2.00
	Max.-Calculated	2.50	3.20
Wall thickness "w"	Min.	0.50	0.80
Shoulder Neck Detail	Dia "dg1" Min.	3.40	4.40
	Width "g1" Max.	2.50	2.50
	Radius "R1" Min.	0.10	0.15
Thread Neck Detail	Dia "dg2" Min.	2.10	2.80
	Width "g2" Max.	2.00	2.00
	Radius "R2" Min.	0.10	0.15

LPS Norm 1020- Hexagon Socket Shoulder Screws of Corrosion Resistant (Austenitic & Martensitic) Steel for Electronics Industries

SHOULDER SCREWS - METRIC Series For ELECTRONIC INDUSTRIAL USE LPS NORMS 1020

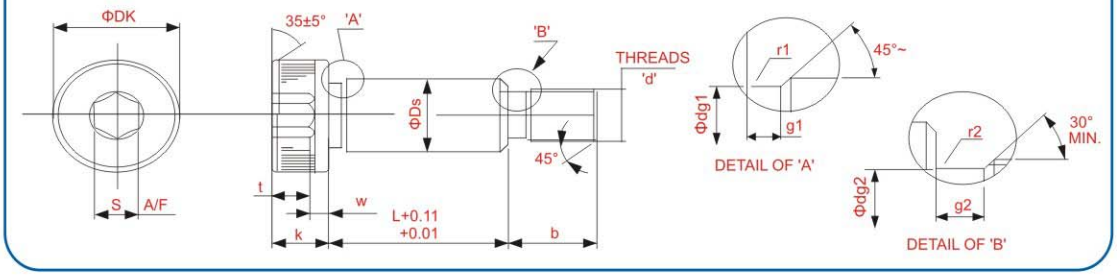

Range & General Specification

Product Standard	**LPS Norm 1020**
Material	Austenitic Stainless Steel AISI 302 / 303 / 304 (A2) Hardness 85-98 HRB. Martensitic Corossion Resistant Steel AISI 416, Hardness 26-36 HRC.
Surface Finish	PLAIN Finish & Rust preventive OIL Layer all Over the Surface.

Shoulder Dia " Ds"	Nominal	4.0	5.0	6.0	8.0	10.0 Special	10.0	12.0
Length	4	■	■	■				
	5	■	■	■	■			
	6	■	■	■	■	■	■	
	8	■	■	■	■	■	■	
	10	■	■	■	■	■	■	■
	12	■	■	■	■	■	■	■
	14	■	■	■	■	■	■	■
	16	■	■	■	■	■	■	■
	20		■	■	■	■	■	■
	25		■	■	■	■	■	■
	30		■	■	■	■	■	■
	35							
	40							
	45							
	50							

Range : Standard ■ LPS ■

Dimension & Technical Specification

Shoulder Dia " Ds"	Nominal	**4.0**	**5.0**	**6.0**	**8.0**	**10.0** Special	**10.0**	**12.0**
	Max.	3.987	4.987	5.987	7.987	9.987	9.987	11.987
	Min.	3.962	4.962	5.962	7.962	9.962	9.962	11.962
Thread "d"	Thread Class-6g	M3 X 0.5	M4 X 0.7	M5 X 0.8	M6 X 1.0	M6 X 1.0	M8 X1.25	M10 X1.5
Thread Length "b"	Nominal	**4.00**	**5.00**	**6.00**	**11.00**	**11.00**	**12.00**	**16.00**
	Max.	4.25	5.25	6.25	11.25	11.25	12.25	16.40
	Min.	3.75	4.75	5.75	10.75	10.75	11.75	15.60
Head Dia "Dk"	Max.	6.00	8.00	10.00	12.00	12.00	14.00	20.00
	Min.	5.78	7.78	9.78	11.73	11.73	13.73	19.73
Head Height "K"	Max.	3.00	4.00	5.00	6.00	6.00	7.00	8.00
	Min.	2.82	3.82	4.82	5.82	5.82	6.78	7.78
Socket Size "A/F"	Nominal	**2.00**	**2.50**	**3.00**	**4.00**	**4.00**	**5.00**	**6.00**
	Max.	2.050	2.560	3.080	4.095	4.095	5.095	6.095
	Min.	2.020	2.520	3.020	4.020	4.020	5.020	6.020
Socket Depth "t"	Min.	1.60	2.00	2.40	3.20	3.20	4.00	4.80
	Max. Calculated	2.10	2.70	3.50	4.30	4.30	5.10	5.90
Wall thickness "w"	Min.	0.70	1.00	1.30	1.50	1.50	1.60	1.80
Shoulder Neck Detail	Dia "dg1" Min.	3.55	4.55	5.50	7.50	9.50	9.50	11.50
	Width "g1" Max.	1.20	1.20	1.40	1.80	1.80	1.80	2.00
	Radius "R1" Min.	0.10	0.15	0.20	0.40	0.40	0.60	0.60
Thread Neck Detail	Dia "dg2" Min.	2.12	2.82	3.68	4.40	4.40	6.03	7.69
	Width "g2" Max.	1.10	1.40	1.60	2.00	2.00	2.40	2.80
	Radius "R2" Min.	0.15	0.30	0.40	0.50	0.50	0.60	0.70

LPS Norm 1021-Hexagon Socket Shoulder Screw of Corrosion Resistant (Austenitic & Martensitic) Steel for Electronic Industtries-Inch Series

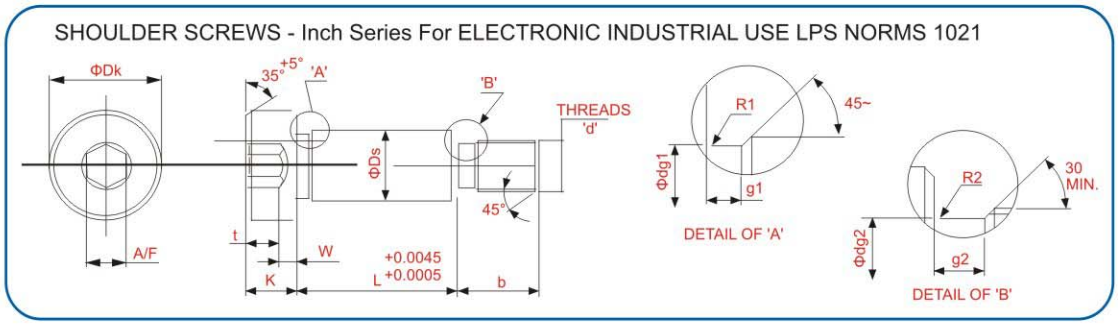

Range & General Specification

Product Standard	**LPS Norm - 1021**
Material	Austenitic Stainless Steel AISI 302 / 303 / 304 (A2) Hardness 85-98 HRB. Martensitic Corossion Resistant Steel AISI 416, Hardness 26-36 HRC.
Surface Finish	PLAIN Finish & Rust preventive OIL Layer all over the Surface.

Shoulder Dia " Ds"	Nominal	1/8"	5/32"	3/16"	1/4"	5/16"	3/8" Special	3/8"	1/2"
Length	1/8″	■	■	■	■				
	3/16″	■	■	■	■				
	1/4″	■	■	■	■	■	■		
	5/16″	■	■	■	■	■	■	■	
	3/8″	■	■	■	■	■	■	■	■
	1/2″	■	■	■	■	■	■	■	■
	5/8″	■	■	■	■	■	■	■	■
	3/4″	■	■	■	■	■	■	■	■
	7/8″		■	■	■	■	■	■	■
	1		■	■	■	■	■	■	■
	1-1/4″			■	■	■	■	■	■
	1-1/2″			■	■	■	■	■	■
	1-3/4″								
	2								

Range : Standard ■ LPS ■

Dimension & Technical Specification

Shoulder Dia " Ds" Tol.-0.0005/-0.0015	Nominal	**1/8" (0.1250)**	**5/32" (0.1562)**	**3/16" (0.1875)**	**1/4" (0.2500)**	**5/16" (0.3125)**	**3/8" (0.3750)**	**3/8" (0.3750) Special**	**1/2" (0.5000)**
	Max.	0.1245	0.1557	0.1870	0.2495	0.3120	0.3745	0.3745	0.4995
	Min.	0.1235	0.1547	0.1860	0.2485	0.3110	0.3735	0.3735	0.4985
Thread "d"	Thread Class	# 4-40 UNC-2A	# 6-32 UNC-2A	# 8-32 UNC-2A	#10-32 UNC-2A	1/4-20 UNC-2A	1/4-20 UNC-2A	5/16-18 UNC-2A	3/8-16 UNC-2A
Thread Length "b"	Nominal	**5/32"**	**3/16"**	**3/16"**	**1/4"**	**7/16"**	**7/16"**	**1/2"**	**5/8"**
	Max.	0.156	0.188	0.188	0.250	0.438	0.438	0.500	0.625
	Min.	0.141	0.173	0.173	0.235	0.420	0.420	0.482	0.605
Head Dia "Dk"	Max.	0.250	0.282	0.313	0.375	0.500	0.500	0.563	0.750
	Min.	0.240	0.271	0.302	0.364	0.487	0.487	0.548	0.735
Head Height "K"	Max.	0.125	0.125	0.156	0.188	0.219	0.219	0.250	0.313
	Min.	0.117	0.117	0.148	0.176	0.207	0.207	0.238	0.301
Socket Size "A/F"	Nominal	**5/64"**	**3/32"**	**3/32"**	**1/8"**	**5/32"**	**5/32"**	**3/16"**	**1/4"**
	Max.	0.0795	0.0952	0.0952	0.1270	0.1587	0.1587	0.1900	0.2530
	Min.	0.0781	0.0937	0.0937	0.1250	0.1562	0.1562	0.1875	0.2500
Socket Depth "t"	Min.	0.062	0.078	0.078	0.093	0.125	0.125	0.156	0.187
	Max. Calculated	0.082	0.098	0.103	0.118	0.155	0.155	0.186	0.217
Wall thickness "w"	Min.	0.025	0.019	0.035	0.042	0.048	0.048	0.052	0.074
Shoulder Neck Detail	Dia "dg1" Min.	0.107	0.138	0.169	0.232	0.295	0.357	0.357	0.482
	Width "g1" Max.	0.045	0.045	0.050	0.062	0.062	0.072	0.072	0.088
	Radius "R1" Min.	0.004	0.005	0.006	0.008	0.011	0.013	0.013	0.018
Thread Neck Detail	Dia "dg2" Min.	0.072	0.089	0.118	0.143	0.182	0.182	0.239	0.292
	Width "g2" Max.	0.052	0.065	0.065	0.065	0.090	0.090	0.105	0.115
	Radius "R2" Min.	0.010	0.012	0.013	0.015	0.020	0.020	0.022	0.025

Applications Dowel Pins

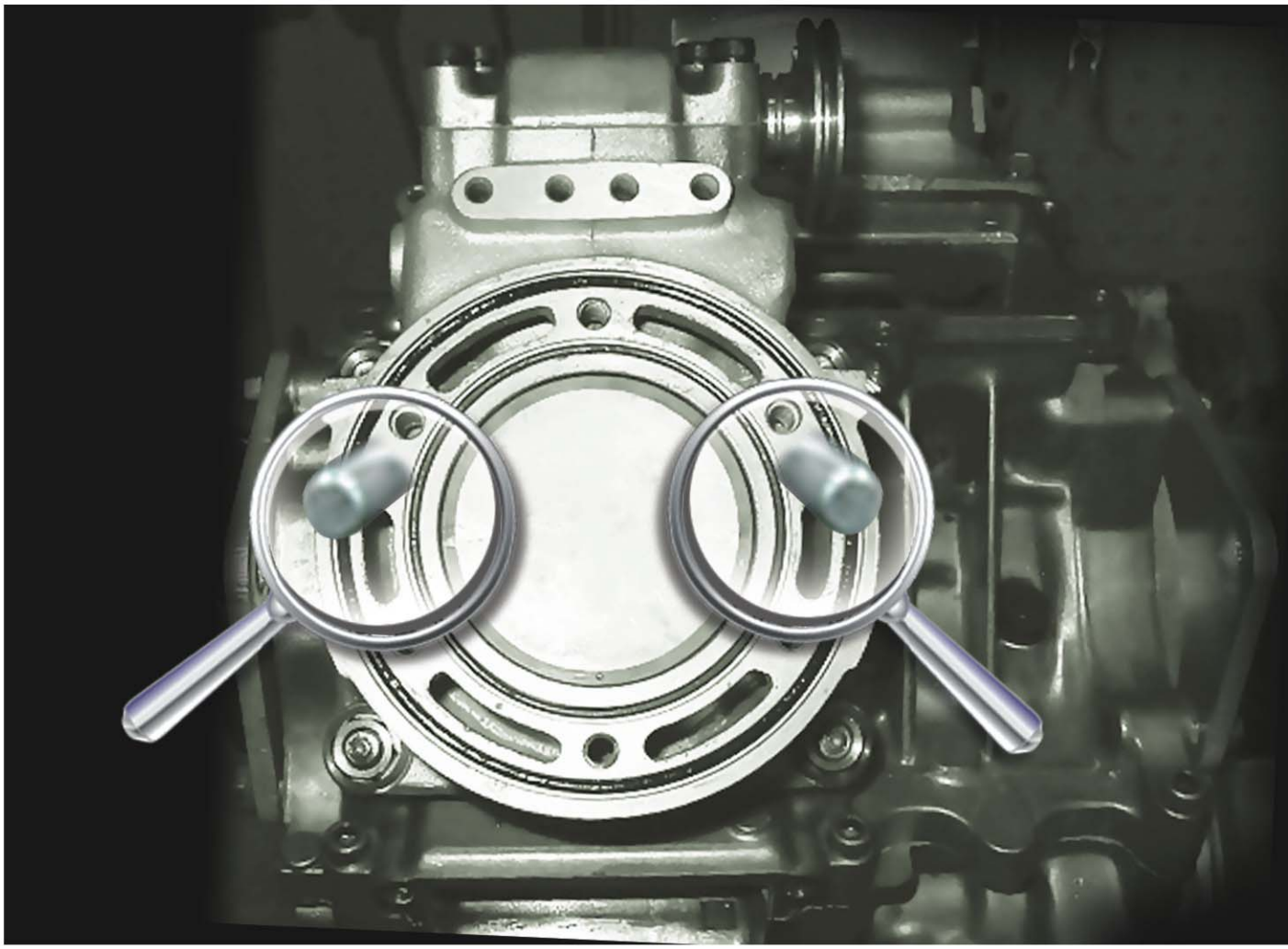

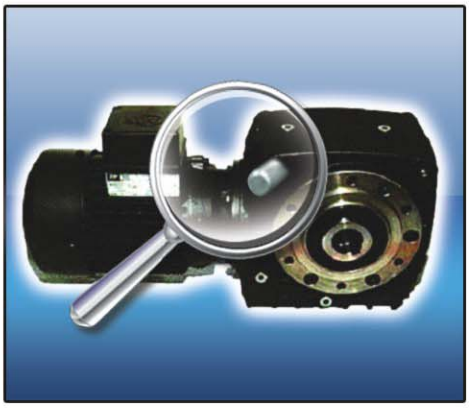

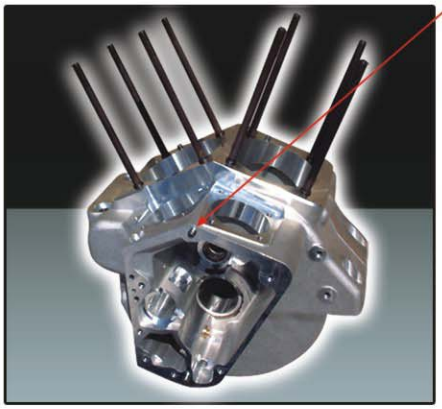

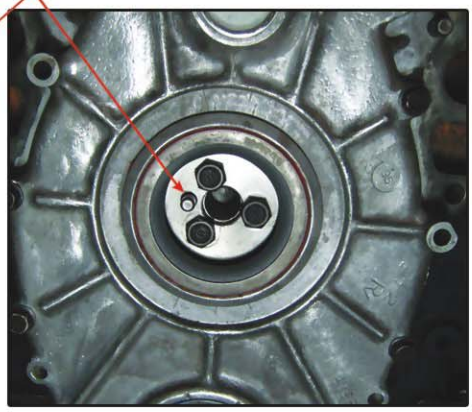

Pins

Pins are a unique type of fasteners that can hold two materials together non-permanently. Unlike bolts and nuts, which press the materials together for holding power, pin can hold the assembly together with no torque pressure. Although there are many types of pins like **Dowel Pins, Pull Dowel Pin, Parallel Pin, Taper Pins,** etc. and all the pins have been designed for a special jobs.

Dowel Pins are accurately dimensional pins that are pressed into one assembly part and slipped into another assembly part ensure accurate alignment.

Applications Dowel Pins

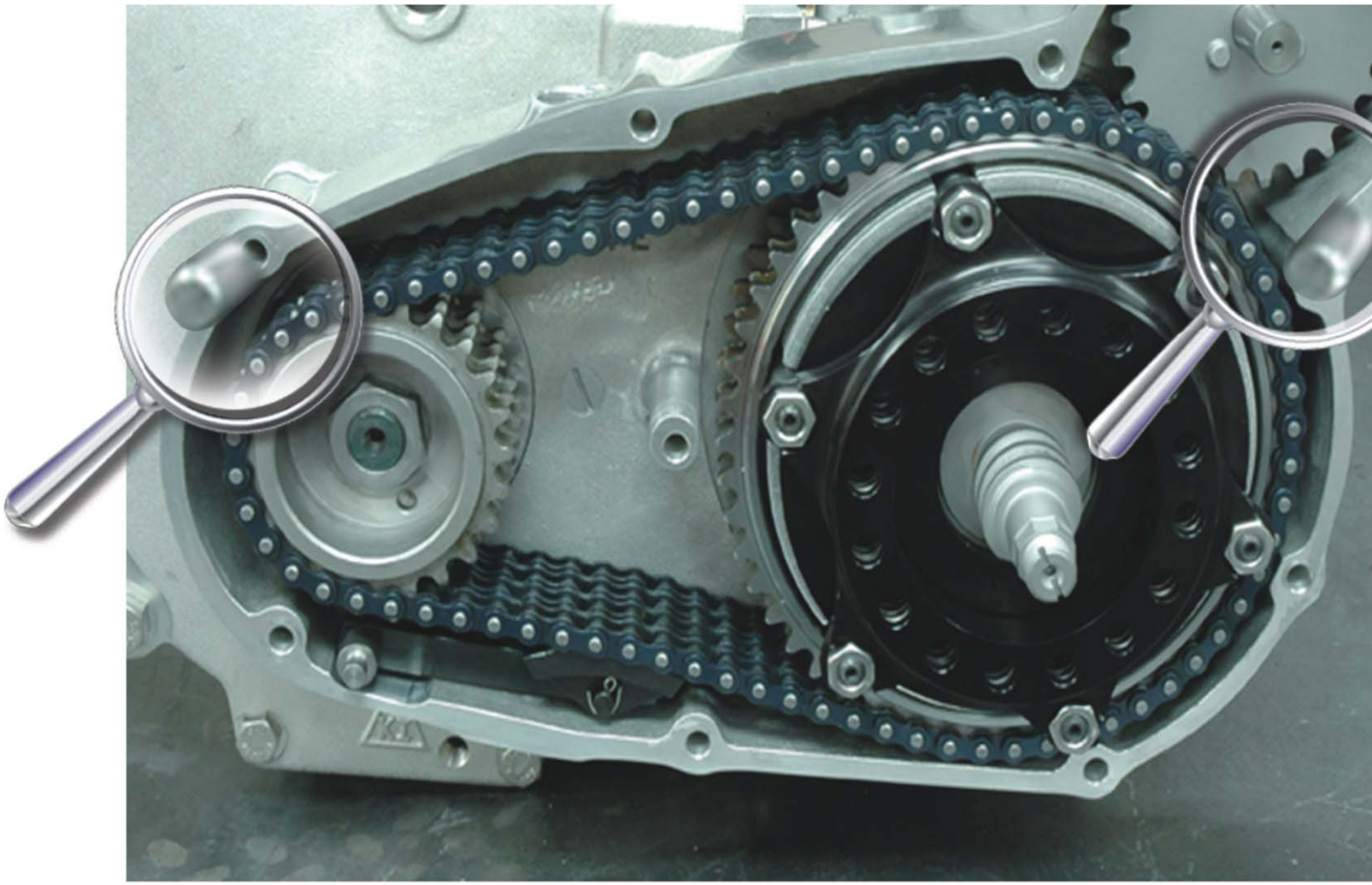

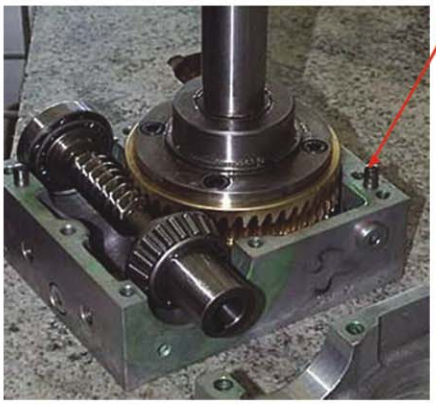

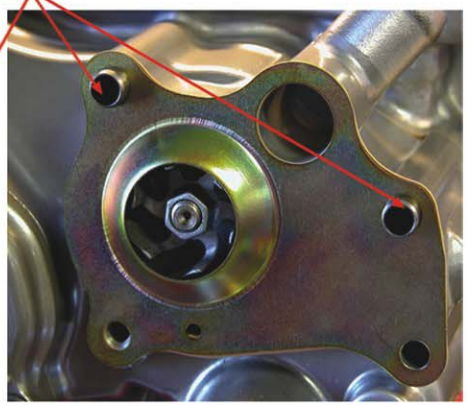

Applications Dowel Pins

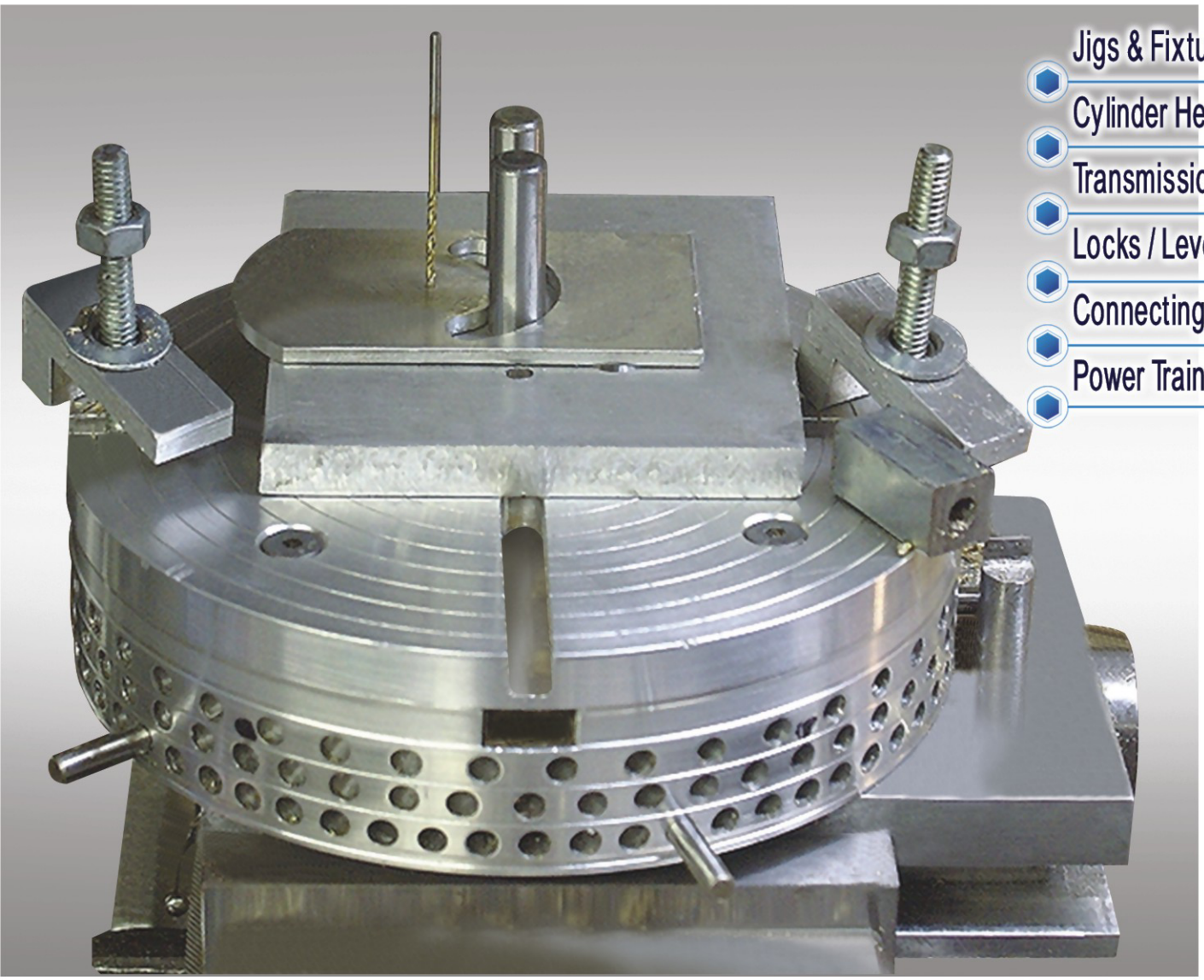

- Jigs & Fixtures
- Cylinder Heads
- Transmission
- Locks / Levers
- Connecting Rod
- Power Train

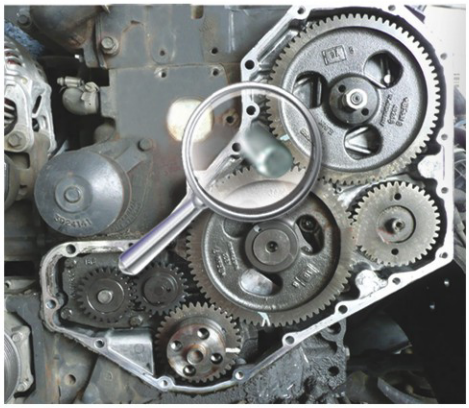

DIN 1- 1981 Unhardened Taper Dowel Pin

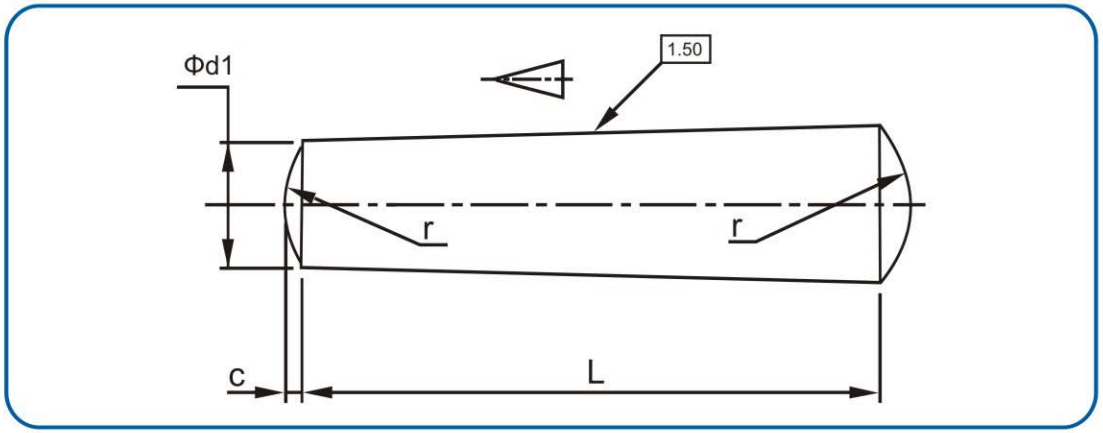

Specification	DIN 1-1981
Material	Free Cutting Steel
	Austenitic Stainless Steel (AISI 302/303/304/316)
Hardness	Free Cutting Steel : 125 to 245 HV30
	Austenitic Stainless Steel : 210 - 280 HV30
Surface Roughness	Ra < 0.8 For Type A (Ground Pin)
	Ra < 3.2 For Type B (Turned Pin)
Note	Nominal Length 'L' is Excluding Crowned Ends.

Range & General Specifications

Diameter "d1" Tol. h10"	Nominal	**1.5**	**2.0**	**2.5**	**3.0**	**4.0**	**5.0**	**6.0**	**8.0**	**10.0**	**12.0**	**14.0**	**16.0**	**20.0**	**25.0**	**30.0**	**40.0**	**50.0**
	Max.	1.5	2	2.5	3	4	5	6	8	10	12	14	16	20	25	30	40	50
	Min.	1.46	1.96	2.46	2.96	3.952	4.952	5.952	7.942	9.942	11.93	13.93	15.93	19.92	24.92	29.92	39.9	49.9
Radius 'r'	Approx	1.5	2.0	2.5	3.0	4.0	5.0	6.0	8.0	10.0	12.0	14.0	16.0	20.0	25.0	30.0	40.0	50.0
Radius Length 'c'	Max.	0.23	0.3	0.4	0.45	0.6	0.75	0.9	1.2	1.5	1.8	2	2.5	3	4	4.5	6	7.5
Tolerance on 'L'		js15	js15	js15	js15	js15	js15	js15	js15	js15	js15	js15	js15	js15	js15	js15	js15	js15
Standard Range of Length 'L'	Max.	24	36	40	50	60	70	90	120	140	165	165	230	230	260	260	260	260
	Min.	10	12	12	14	16	20	24	28	32	36	36	40	50	55	60	70	80
LPS Range of Length 'L'	Max.	30	50	50	60	80	80	100	120	150	180	180	250	280	280	280	280	280
	Min.	6	6	6	8	10	12	16	16	24	24	28	32	40	50	60	70	80

Value of Tolerance Class "js15"

Length Above	3.0	6.0	10.0	18.0	30.0	50.0	80.0	120.0	180.0	250.0
Length Up to	6.0	10.0	18.0	30.0	50.0	80.0	120.0	180.0	250.0	315.0
Value of "js15"	+/- 0.24	+/- 0.29	+/- 0.35	+/- 0.42	+/- 0.50	+/- 0.60	+/- 0.70	+/- 0.80	+/- 0.925	+/- 1.05

DIN 7- 1981 Tolerance Class "m6" (Interference fit) Unhardened & Ground Dowel Pin

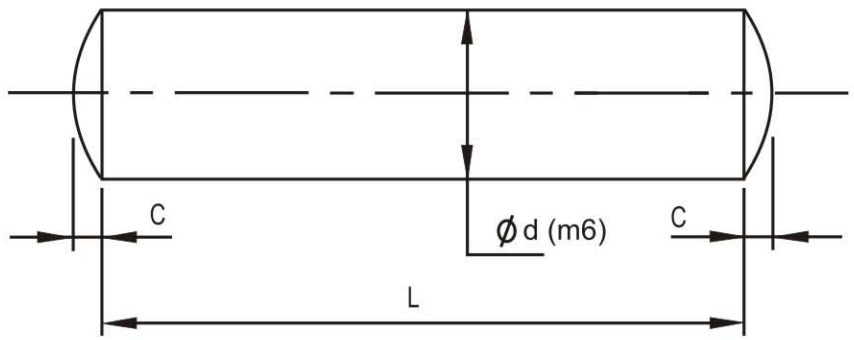

Specification	DIN 7- 1981-Tol Class"m6"
	(For Tol. "h8" refer separate sheet)
Material	Free Cutting Steel
	Austenitic Stainless Steel (AISI 302/303/304/316)
Hardness	Free Cutting Steel : 125 - 245 HV30
	Austenitic Stainless Steel : 210 - 280 HV30
Note	Nominal length 'L' is Excluding Crowned Ends.

Range & General Specifications

Diameter "Φd" Tol. m6	Nominal	**0.8**	**1.0**	**1.2**	**1.5**	**2.0**	**2.5**	**3.0**	**4.0**	**5.0**	**6.0**	**8.0**	**10.0**	**12.0**	**14.0**	**16.0**	**20.0**	**25.0**	**30.0**	**40.0**	**50.0**
	Max.	0.808	1.008	1.208	1.508	2.008	2.508	3.008	4.012	5.012	6.012	8.015	10.015	12.018	14.018	16.018	20.021	25.021	30.021	40.025	50.025
	Min.	0.802	1.002	1.202	1.502	2.002	2.502	3.002	4.004	5.004	6.004	8.006	10.006	12.007	14.007	16.007	20.008	25.008	30.008	40.009	50.009
Radius 'r'	Approx	0.8	1.0	1.2	1.5	2.0	2.5	3.0	4.0	5.0	6.0	8.0	10.0	12.0	14.0	16.0	20.0	25.0	30.0	40.0	50.0
Radius Length 'c'	Max.	0.12	0.2	0.2	0.2	0.3	0.4	0.5	0.6	0.8	0.9	1.2	1.8	1.8	2.0	2.5	3.0	4.0	4.5	6.0	7.5
Standard Range of Length 'L'	Max.	8	8	12	14	16	20	32	40	50	60	90	100	120	160	180	200	200	200	200	200
	Min.	3	3	3	3	4	4	4	5	5	6	8	10	10	14	16	20	24	32	40	50
LPS Range of Length 'L'	Max.	12	16	20	30	40	40	60	80	80	100	100	120	200	200	200	250	250	300	300	300
	Min.	3	3	3	3	4	4	4	5	5	6	8	10	10	14	16	20	24	32	40	50

Tolerance on length 'L'

Length Above	2.0	12.0	65.0	200.0
Length Up to	10.0	50.0	200.0	300.0
Tolerance	+ 0.3/-0.0	+ 0.6/-0.0	+ 0.8/-0.0	+ 1.0/-0.0

DIN 7- 1981 Tolerance Class "h8" (Slip Fit) Unhardened & Ground Dowel Pin

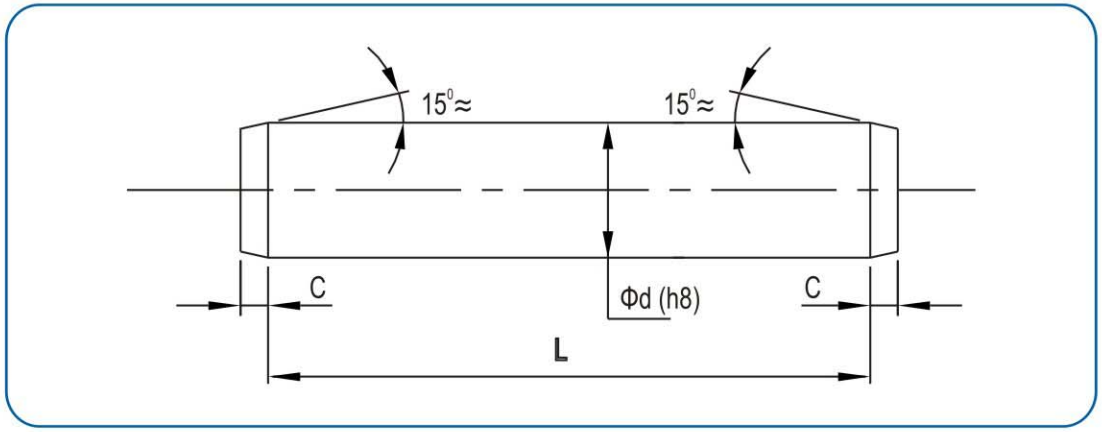

Specification	DIN 7- 1981-Tol Class"h8"
	For Tol. "m6" Refer Separate Sheet
Material	Free Cutting Steel
	Austenitic Stainless Steel (AISI 302/303/304/316)
Hardness	Free Cutting Steel : 125 - 245 Hv30
	Austenitic Stainless Steel : 210 - 280 Hv30
Note	Nominal Length 'L' is Excluding Chamfered Ends.

Range & General Specifications

Diameter "Φd(h8)" Tol. h8	Nominal	**0.8**	**1.0**	**1.2**	**1.5**	**2.0**	**2.5**	**3.0**	**4.0**	**5.0**	**6.0**	**8.0**	**10.0**	**12.0**	**14.0**	**16.0**	**20.0**	**25.0**	**30.0**	**40.0**	**50.0**
	Max.	0.800	1.000	1.200	1.500	2.000	2.500	3.000	4.000	5.000	6.000	8.000	10.000	12.000	14.000	16.000	20.000	25.000	30.000	40.000	50.000
	Min.	0.786	0.986	1.186	1.486	1.986	2.486	2.986	3.982	4.982	5.982	7.978	9.978	11.973	13.973	15.973	19.967	24.967	29.967	39.961	49.961
Chamfer Length 'c'	Max.	0.2	0.2	0.2	0.2	0.3	0.4	0.5	0.6	0.8	0.9	1.2	1.8	1.8	2.0	2.5	3.0	4.0	4.5	6.0	7.5
Standard Range of Length 'L'	Max.	8	8	12	14	16	20	32	40	50	60	80	100	120	160	180	200	200	200	200	200
	Min.	3	3	3	3	4	4	4	5	5	6	8	10	10	14	16	20	24	32	40	50
LPS Range of Length 'L'	Max.	12	16	20	30	40	40	60	80	80	100	100	120	200	200	200	250	250	300	300	300
	Min.	3	3	3	3	4	4	4	5	5	6	8	10	10	14	16	20	24	32	40	50

Tolerance on length 'L'

Length Above	2.0	12.0	65.0	200.0
Length Up to	10.0	50.0	200.0	300.0
Tolerance	+ 0.5/-0.0	+ 1.0/-0.0	+ 1.5/-0.0	+ 2.0/-0.0

DIN 6325- 1971 Tolerance Class "m6" (Interference Fit) Hardened & Ground Dowel Pin

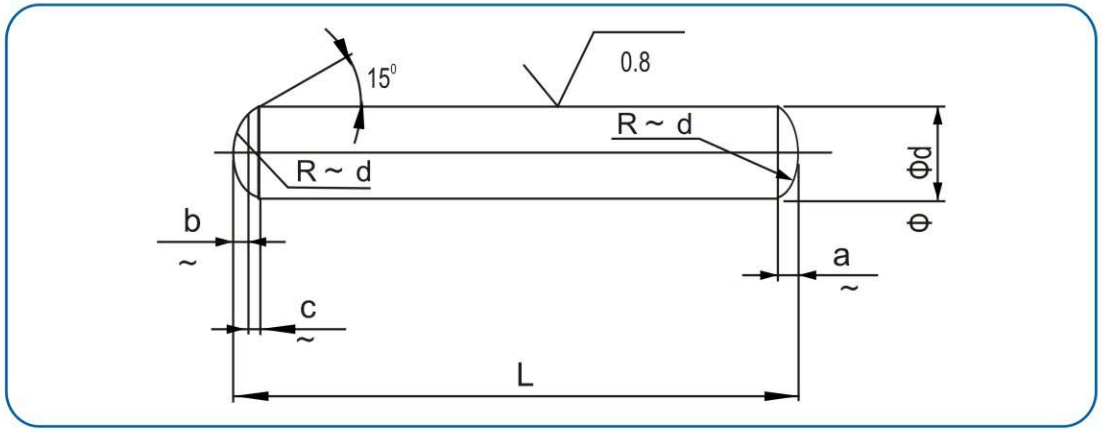

Specification	DIN 6325 - 1971
Material	High Grade Alloy Steel " 100 Cr 6 "
Hardness	Through Hardened to 58 - 62 HRC
Surface Roughness	Ra≤ 0.8

DIN 6325- 1971 Tolerance Class "m6" (Interference Fit) Hardened & Ground Dowel Pin

Diameter "d" Tol. m6"	Nominal	1.5	2.0	2.5	3.0	4.0	5.0	6.0	8.0	10.0	12.0	14.0	16.0	20.0	25.0	30.0
	Max.	1.508	2.008	2.508	3.008	4.012	5.012	6.012	8.015	10.015	12.018	14.018	16.018	20.021	25.021	30.021
	Min.	1.502	2.002	2.502	3.002	4.004	5.004	6.004	8.006	10.006	12.007	14.007	16.007	20.008	25.008	30.008
Chamfer "C"	Approx	0.5	0.6	0.7	0.8	1.0	1.2	1.5	1.8	2.0	2.5	2.5	3.0	4.0	5.0	6.0
Distance "b"	Approx	0.12	0.18	0.25	0.3	0.4	0.5	0.6	0.8	1	1.3	1.5	1.7	2	2.6	3.1
Distance "a"	Approx	0.23	0.3	0.4	0.45	0.6	0.75	0.9	1.2	1.5	1.8	2	2.5	3	3.5	4
Tolerance on 'L'		js14	js14	js14	js14	js14	js14	js14	js14	js14	js14	js14	js14	js14	js14	js14
Standard Range of Length 'L'	Max.	16	20	24	32	40	50	60	80	100	100	120	120	120	Not Specified	Not Specified
	Min.	4	6	6	8	10	12	14	16	24	28	36	40	50		
LPS Range of Length 'L'	Max.	**30**	**40**	**40**	**60**	**60**	**60**	**100**	**120**	**120**	**120**	**120**	**120**	**120**	**150**	**180**
	Min.	**4**	**4**	**5**	**6**	**6**	**8**	**10**	**14**	**16**	**20**	**24**	**24**	**40**	**45**	**50**

DIN 6325- 1971 Tolerance Class "h6" (SLIP Fit) against Demand

Diameter "d" Tolerance m6"	Nominal	1.5	2.0	2.5	3.0	4.0	5.0	6.0	8.0	10.0	12.0	14.0	16.0	20.0	25.0	30.0
	Max.	1.500	2.000	2.500	3.000	4.000	5.000	6.000	8.000	10.000	12.000	14.000	16.000	20.000	25.000	30.000
	Min.	1.494	1.994	2.494	2.994	3.992	4.992	5.992	7.991	9.991	11.989	13.989	15.989	19.987	24.987	29.987

Chamfer "c", Distance "a",Distance "b" Standard Range for length etc are same as that of Din 6325 with Tolerance class "m6"

Value of Tolerance Class "js14"

Length Above	3.0	6.0	10.0	18.0	30.0	50.0	80.0	120.0
Length Up to	6.0	10.0	18.0	30.0	50.0	80.0	120.0	180.0
Value of "js14"	+/- 0.15	+/- 0.18	+/- 0.21	+/- 0.26	+/- 0.31	+/- 0.38	+/- 0.44	+/- 0.50

DIN 7977 : 1977 Taper PIN with External Thread (Unhardened)

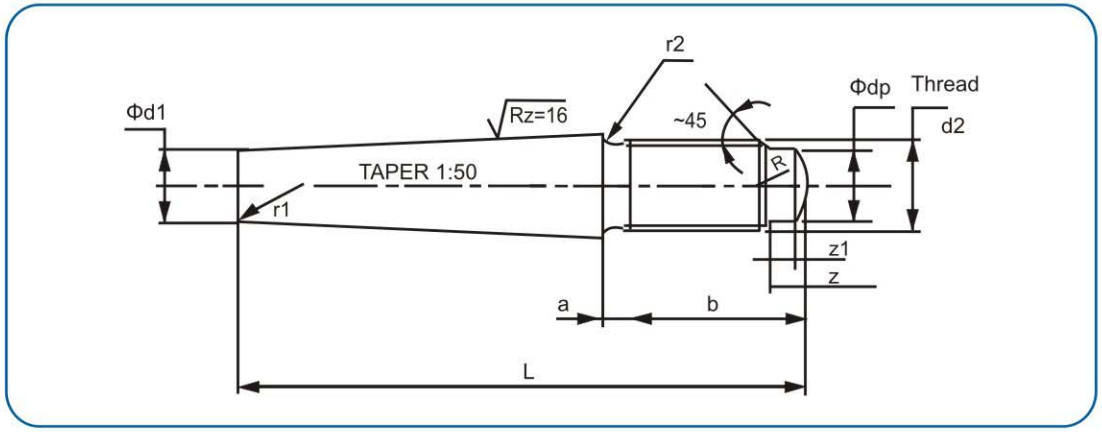

Specification	DIN 7977- 1977
Material	Free Cutting Steel
	Austenitic Stainless Steel (AISI 302/303/304/316)
Hardness	Free Cutting Steel : 125 - 245 HV30
	Austenitic Stainless Steel : 210 - 280 HV30
Note	Basic Length is equal to Total length including the Thread Length "b"

Range & General Specifications

Diameter "d1" with Tol. h10"	Nominal	**5.0**	**6.0**	**8.0**	**10.0**	**12.0**	**14.0**	**16.0**	**20.0**	**25.0**	**30.0**	**40.0**	**50.0**
	Max.	5.000	6.000	8.000	10.000	12.000	14.000	16.000	20.000	25.000	30.000	40.000	50.000
	Min.	4.952	5.952	7.942	9.942	11.930	13.930	15.930	19.916	24.916	29.916	39.900	49.900
Thread Length 'b'	Max.	15.60	20.00	24.50	27.00	30.50	33.50	39.00	39.00	45.00	52.00	65.00	78.00
	Min.	14.00	18.00	22.00	24.00	27.00	30.00	35.00	35.00	40.00	46.00	58.00	70.00
Thread Size 'd2'		M5	M6	M8	M10	M12	M12	M16	M16	M20	M24	M30	M36
Thread Pitch 'P'	Coarse	0.80	1.00	1.25	1.50	1.75	1.75	2.00	2.00	2.50	3.00	3.50	4.00
Thread Run-out"a"	Max.	2.40	3.00	4.00	4.50	5.30	5.30	6.00	6.00	7.50	9.00	10.50	12.00
End Radius 'r1'	Approx	0.3	0.4	0.4	0.5	0.6	0.6	0.8	0.8	1	1	1.2	1.6
Junction Radius 'r2'	Approx	0.6	0.6	0.6	1.0	1.0	1.0	1.6	1.6	1.6	2.5	2.5	4
Dog Point Dia 'dp'	Max.	3.50	4.00	5.50	7.00	8.50	8.50	12.00	12.00	15.00	18.00	23.00	28.00
	Min.	3.25	3.70	5.20	6.60	8.10	8.10	11.50	11.50	14.50	17.50	22.50	27.50
Crown Radius 'R'	Approx	3.5	4.0	5.5	7.0	8.5	8.5	12.0	12.0	15.0	18.0	23.0	28
Crown Zone Length 'Z1'	Approx	0.5	0.6	0.9	1.0	1.2	1.2	1.7	1.7	2.0	2.5	3.0	3.8
Dog Point Length 'Z'	Max.	1.50	1.75	2.25	2.75	3.25	3.25	4.30	4.30	5.30	6.30	7.90	9.40
	Min.	1.25	1.50	2.00	2.50	3.00	3.00	4.00	4.00	5.00	6.00	7.00	9.00
Standard Range of Length 'L'	Max.	50	60	75	100	140	140	160	190	250	280	320	360
	Min.	40	45	55	65	85	85	100	120	140	160	190	220
LPS Range of Length 'L'	Max.	60	80	100	140	180	180	200	250	300	300	350	400
	Min.	30	40	45	55	60	70	80	90	100	120	150	190

Tolerance on Length L (Tolerance Class "js15")

Length Above	3.0	6.0	10.0	18.0	30.0	50.0	80.0	120.0	180.0	250.0	315.0
Length Up to	6.0	10.0	18.0	30.0	50.0	80.0	120.0	180.0	250.0	315.0	400.0
Value of "js15"	+/- 0.24	+/- 0.29	+/- 0.35	+/- 0.42	+/- 0.50	+/- 0.60	+/- 0.70	+/- 0.80	+/- 0.925	+/- 1.05	+/- 1.15

DIN 7978-1977 Unhardened Taper Pin with Internal Thread

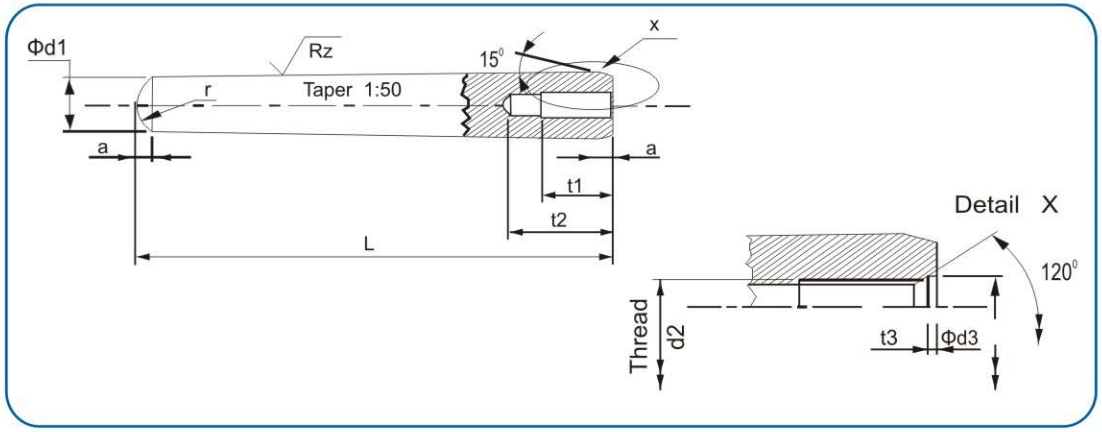

Specification	DIN 7978 : 1977
Material	Free Cutting Steel
	Austenitic Stainless Steel (AISI 302/303/304/316)
Hardness	Free Cutting Steel : 125 - 245 HV30
	Austenitic Stainless Steel : 210 - 280 HV30
Surface Roughness	Rz = 4 (Or Ra < 0.8) For Type A (Ground Pin)
	Rz =16 (Or Ra=3.2) For Type B (Turned Pin)
Note	Internal Thread Length "t1" & Drill Depth "t2" for Length less than Min. specified in DIN En ISO 8733 will be as per LPS norms. For example: Pin of Length 12 mm of dia 10.0mm, will have Thread depth 4.0mm (against 10mm) and drill depth will be 10.5 Max. (against 16 Min.)

Range & General Specifications

Diameter "d1"	Nominal	**6.0**	**8.0**	**10.0**	**12.0**	**14.0**	**16.0**	**20.0**	**25.0**	**30.0**	**40.0**	**50.0**
Tol. "h10"	Max.	6.000	8.000	10.000	12.000	14.000	16.000	20.000	25.000	30.000	40.000	50.000
	Min.	5.952	7.942	9.942	11.930	13.930	15.930	19.916	24.916	29.916	39.900	49.900
Chamfer & Crown Zone "a"	Approx	0.8	1.0	1.2	1.6	1.8	2.0	2.5	3.0	4.0	5.0	6.3
End Crown Radius "r"	Approx	6.0	8.0	10.0	12.0	14.0	16.0	20.0	25.0	30.0	40.0	50.0
Internal Threads 'd2'	Class -6H	M4	M5	M6	M8	M8	M10	M12	M16	M20	M20	M24
Thread Pitch 'P'		0.7	0.8	1	1.25	1.25	1.5	1.75	2	2.5	2.5	3
Tap Length 't1'		6	8	10	12	12	16	18	24	30	30	36
Drill Length 't2'	Min.	10	12	16	20	20	25	27	34	42	42	50
Length 't3'	Approx	1	1.2	1.2	1.2	1.2	1.5	1.5	2	2	2.5	2.5
Dia 'd3'	Approx	4.3	5.3	6.4	8.4	8.4	10.5	13	17	21	21	25
Standard Range of	Max.	55	90	110	130	140	180	250	250	250	250	250
Length 'L'	Min.	16	20	24	28	28	32	36	45	55	90	110
LPS Range of Length 'L'	Max.	80	100	120	150	150	200	250	250	250	280	280
	Min.	10	16	16	16	18	18	24	36	45	70	90

Tolerance on Length 'L' (Tolerance Class "js15")

Length Above	6.0	10.0	18.0	30.0	50.0	80.0	120.0	180.0	250.0
Length Up to	10.0	18.0	30.0	50.0	80.0	120.0	180.0	250.0	315.0
Value of "js15"	+/- 0.29	+/- 0.35	+/- 0.42	+/- 0.50	+/- 0.60	+/- 0.70	+/- 0.80	+/- 0.925	+/- 1.05

DIN 7979 FORM D : 1977 - Tolerence Class "m6" (Interference Fit) Hardened & Ground Pin with Internal Thread

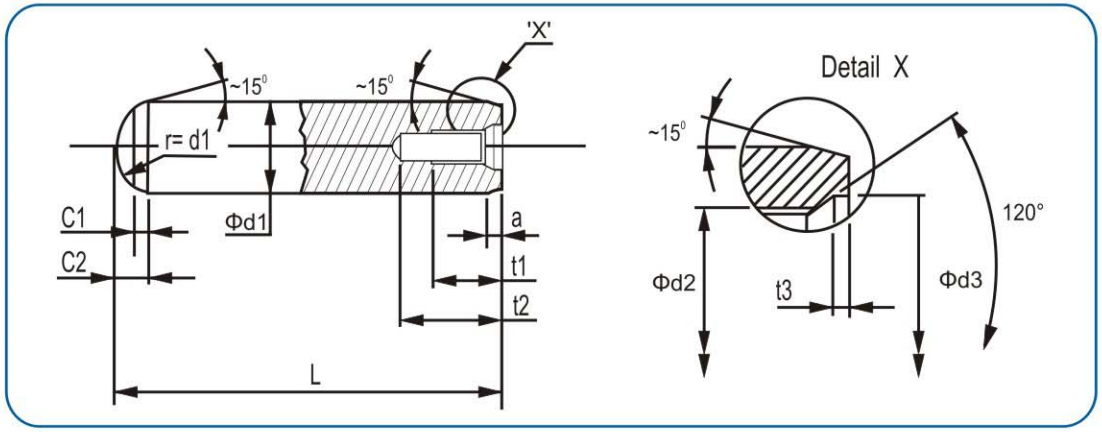

Specification	DIN 7979 FORM D : 1977
Material	High Grade Alloy Steel " 100 Cr 6 "
Hardness	Through Hardened to 58 - 62 HRC
Note (a)	Dia 4, 5, & 13 are not specified in DIN 7979D however these sizes are supplied as per LPS Norm in line with Din 7979D
(b)	Internal thread length "t1" & Drill Depth "t2" for length less than Min specified in DIN 7979D will be as per LPS norms. For example, pin of length 12mm of dia 10.0mm, will have Thread depth 4.0mm (against 10mm) and drill depth will be 10.5 Max. (against 16 Min.)

Range & General Specifications

Diameter "d1" Tol. m6"	Nominal	* 4.0	* 5.0	6.0	8.0	10.0	12.0	13.0	14.0	16.0	20.0	25.0	30.0	40.0	50.0
	Max.	4.012	5.012	6.012	8.015	10.015	12.018	13.018	14.018	16.018	20.021	25.021	30.008	40.009	50.009
	Min.	4.004	5.004	6.004	8.006	10.006	12.007	13.007	14.007	16.007	20.008	25.008	30.021	40.025	50.025
Chamfer 'a'	Approx	0.6	0.6	0.8	1.0	1.2	1.6	1.6	1.8	2.0	2.5	3.0	4.0	5.0	6.3
Chamfer 'c1'	Approx	0.4	0.5	0.6	0.8	1.0	1.2	1.2	1.4	1.6	2.0	2.5	3.0	4.0	5.0
Crown & Chamfer 'c2'	Approx	1.4	1.5	2.1	2.6	3.0	3.8	3.8	4.0	4.7	6.0	6.0	7.0	8.0	10.0
Internal Threads 'd2'	Class -6H	M2	M3	M4	M5	M6	M6	M6	M8	M8	M10	M16	M20	M20	M24
Thread Pitch 'P'		0.4	0.5	0.7	0.8	1	1	1	1.25	1.25	1.5	2	2.5	2.5	3
Radius 'r'	Approx	4.0	5.0	6.0	8.0	10.0	12.0	13.0	14.0	16.0	20.0	25.0	30.0	40.0	50.0
Tap Length 't1'	Approx	3.5	5	6	8	10	10	10	12	12	16	24	30	30	36
Drill Length 't2'	Min.	6	8	10	12	16	16	16	20	20	25	34	42	42	50
Length 't3'		0.5	1	1	1.2	1.2	1.2	1.2	1.2	1.5	1.5	2	2	2.5	2.5
Dia 'd3'		2.2	3.3	4.3	5.3	6.4	6.4	6.4	8.4	8.4	10.5	17	21	21	25
Standard Range of Length 'L'	Max.	40	50	60	80	100	120	120	140	160	200	200	200	200	200
	Min.	16	16	16	20	24	28	28	28	32	36	45	55	90	110
LPS Range of Length 'L'	Max.	45	60	80	100	120	150	150	150	200	250	250	250	280	280
	Min.	8	10	10	10	12	14	16	18	18	24	36	45	70	90

Value of Tolerance Class "js15"

Length Above	3.0	6.0	10.0	18.0	30.0	50.0	80.0	120.0	180.0	250.0
Length Up to	6.0	10.0	18.0	30.0	50.0	80.0	120.0	180.0	250.0	315.0
Value of "js15"	+/- 0.24	+/- 0.29	+/- 0.35	+/- 0.42	+/- 0.50	+/- 0.60	+/- 0.70	+/- 0.80	+/- 0.925	+/- 1.05

DIN 7979-1977 Form C Tol. "m6" (Interference fit) Unhardened & Ground Pin with Internal Thread

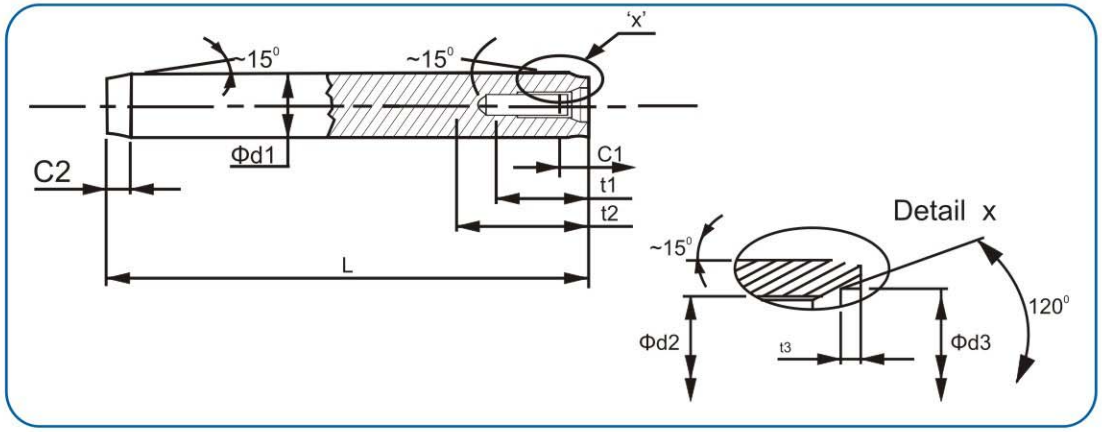

Specification	DIN 7979 : 1977- Form C
Material	Free Cutting Steel
	Austenitic Stainless Steel (AISI 302/303/304/316)
Hardness	Free Cutting Steel : 125 - 245 HV30
	Austenitic Stainless Steel : 210 - 280 HV30
Note (a)	Dia 4 & 5 are not specified in DIN 7979-Form C however these sizes are supplied as per LPS norms in line with Din 7979-C
(b)	Internal thread length "t1" & Drill Depth "t2" for length less than Min specified in DIN En ISO 8733 will be as per LPS norms. For example, pin of length 12 mm of dia 10.0mm, will have Thread depth 4.0mm (against 10mm) and drill depth will be 10.5 Max. (against 16 Min.)

Range & General Specifications

Diameter "d1" Tol. m6"	Nominal	* 4.0	* 5.0	6.0	8.0	10.0	12.0	14.0	16.0	20.0	25.0	30.0	40.0	50.0
	Max.	4.012	5.012	6.012	8.015	10.015	12.018	14.018	16.018	20.021	25.021	30.008	40.009	50.009
	Min.	4.004	5.004	6.004	8.006	10.006	12.007	14.007	16.007	20.008	25.008	30.021	40.025	50.025
Chamfer "c1"	Approx	0.6	0.6	0.8	1.0	1.2	1.6	1.8	2.0	2.5	3.0	4.0	5.0	6.3
Chamfer 'c2'	Approx	0.8	1.0	1.2	1.6	2.0	2.5	2.5	3.0	3.5	4.0	5.0	6.3	8.0
Internal threads 'd2'	Class -6H	M2	M3	M4	M5	M6	M6	M8	M8	M10	M16	M20	M20	M24
Thread Pitch 'P'		0.4	0.5	0.7	0.8	1	1	1.25	1.25	1.5	2	2.5	2.5	3
Tap length 't1'	Approx	3.5	5	6	8	10	12	12	16	18	24	30	30	36
Drill length 't2'	Min.	6	8	10	12	16	20	20	25	28	35	40	40	50
Length 't3'		0.5	1	1	1.2	1.2	1.2	1.2	1.5	1.5	2	2	2.5	2.5
Dia 'd3'		2.2	3.3	4.3	5.3	6.4	6.4	8.4	8.4	10.5	17	21	21	25
Standard Range of length 'L'	Max.	40	50	60	80	100	120	140	160	200	200	200	200	200
	Min.	16	16	16	18	22	26	28	32	40	50	60	80	100
LPS Range of Length L	Max.	45	60	80	100	120	150	150	200	250	250	250	280	280
	Min.	8	10	10	10	12	14	18	18	24	36	45	70	90

Tolerance on Length 'L' (Tolerance Class "js15")

Length Above	3.0	6.0	10.0	18.0	30.0	50.0	80.0	120.0	180.0	250.0
Length Up to	6.0	10.0	18.0	30.0	50.0	80.0	120.0	180.0	250.0	315.0
Value of "js15"	+/- 0.24	+/- 0.29	+/- 0.35	+/- 0.42	+/- 0.50	+/- 0.60	+/- 0.70	+/- 0.80	+/- 0.925	+/- 1.05

DIN En 22339 Unhardened Taper Dowel Pin (Same as ISO 2339-1986)

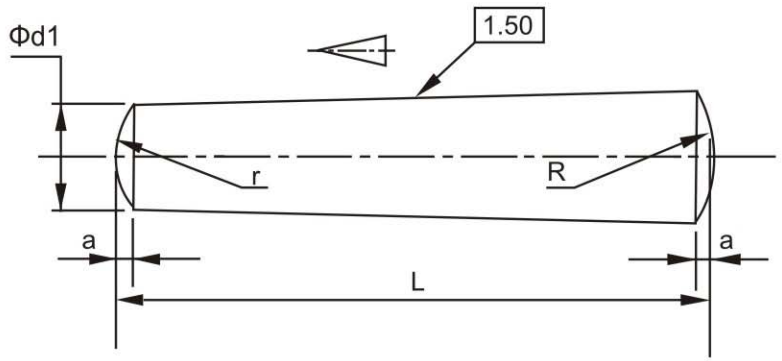

Specification	DIN En22339 - 1992
	(Revised Version of DIN 1- 1981)
Material	Free Cutting Steel
	Austenitic Stainless Steel (AISI 302/303/304/316)
Hardness	Free Cutting Steel : 125 to 245 Hv30
	Austenitic Stainless Steel : 210 - 280 Hv30
Surface Roughness	Ra < 0.8 For Type A (Ground Pin)
	Ra < 3.2 For Type B (Turned Pin)
Note	Overall Length is same as NOMINAL length Radius 'R' variable as per Length 'L'

Range & General Specifications

Diameter "d1" Tol. h10"	Nominal	**1.5**	**2.0**	**2.5**	**3.0**	**4.0**	**5.0**	**6.0**	**8.0**	**10.0**	**12.0**	**14.0**	**16.0**	**20.0**	**25.0**	**30.0**	**40.0**	**50.0**
	Max.	1.5	2	2.5	3	4	5	6	8	10	12	14	16	20	25	30	40	50
	Min.	1.46	1.96	2.46	2.96	3.952	4.952	5.952	7.942	9.942	11.93	13.93	15.93	19.92	24.92	29.92	39.9	49.9
Radius 'r'	Approx	1.5	2.0	2.5	3.0	4.0	5.0	6.0	8.0	10.0	12.0	14.0	16.0	20.0	25.0	30.0	40.0	50.0
Radius Length 'a'	Max.	0.2	0.25	0.3	0.4	0.5	0.63	0.8	1	1.2	1.6	2	2	2.5	3	4	5	6.3
Standard Range of Length 'L'	Max.	24	36	40	50	60	70	90	120	140	165	165	230	230	260	260	260	260
	Min.	10	12	12	14	16	20	24	28	32	36	36	40	50	55	60	70	80
LPS Range of Length 'L'	Max.	6	6	6	8	10	12	16	16	24	24	28	32	40	50	60	70	80
	Min.	30	50	50	60	80	80	100	120	150	180	180	250	280	280	280	280	280

Tolerance on Length 'L'

Length Above	3.0	10.0	50.0	200.0
Length Up to	10.0	50.0	200.0	300.0
Tolerance on Length L	+/- 0.25	+/- 0.50	+/- 0.75	+/- 1.00

DIN EN ISO 2338:1998 (Same as ISO 2338-1997) Unhardened & Ground Dowel Pin

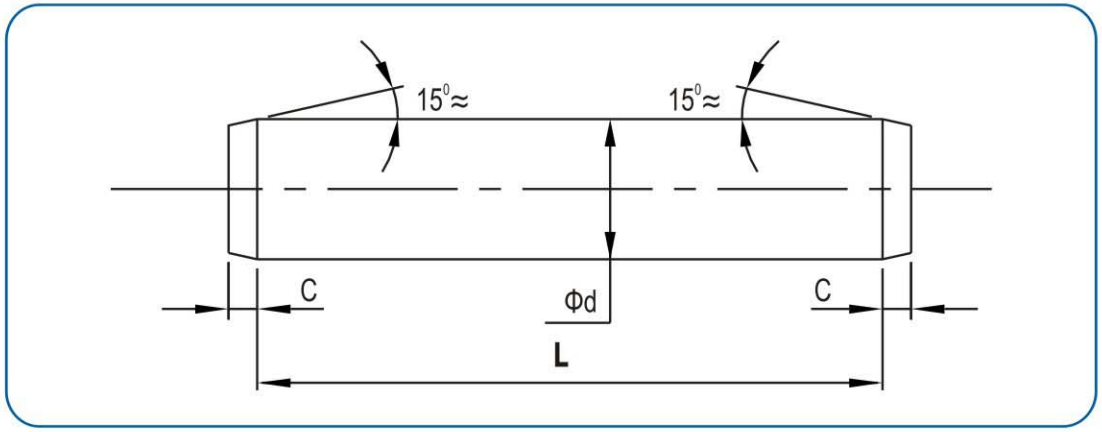

Specification	DIN EN ISO 2338 : 1998
	(Revised Version of Din7-1981& DIN En 22338-1992)
Material	Free Cutting Steel
	Austenitic Stainless Steel (AISI 302/303/304/316)
Hardness	Free Cutting Steel : 125 to 245 HV30
	Austenitic Stainless Steel : 210 - 280 HV30
Note	Overall Length is same as NOMINAL length

Range & General Specifications

Diameter "d"	Nominal	0.8	1.0	1.2	1.5	2.0	2.5	3.0	4.0	5.0	6.0	8.0	10.0	12.0	16.0	20.0	25.0
Tolerance m6" (Interference Fit)	Max.	0.800	1.008	1.208	1.508	2.008	2.508	3.008	4.012	5.012	6.012	8.015	10.015	12.018	16.018	20.021	25.021
	Min.	0.802	1.002	1.202	1.502	2.002	2.502	3.002	4.004	5.004	6.004	8.006	10.006	12.007	16.007	20.008	25.008
Tolerance h8" (Slip Fit)	Max.	0.800	1.000	1.200	1.500	2.000	2.500	3.000	4.000	5.000	6.000	8.000	10.000	12.000	16.000	20.000	25.000
	Min.	0.786	0.986	1.186	1.486	1.986	2.486	2.986	3.982	4.982	5.982	7.978	9.978	11.973	15.973	19.967	24.967
Chamfer "C"	Approx	0.16	0.20	0.25	0.30	0.35	0.40	0.50	0.63	0.80	1.20	1.60	2.00	2.50	3.00	3.50	4.00
Standard Range of Length 'L'	Max.	8	10	12	16	20	24	30	40	50	60	80	95	140	180	200	200
	Min.	4	4	4	4	6	6	8	8	10	12	14	18	22	26	35	50
LPS Range of Length 'L'	Max.	12	16	20	30	40	40	60	80	80	100	100	120	200	200	250	250
	Min.	4	4	4	4	6	6	8	8	10	12	14	18	22	26	35	50

Tolerance on 'L'

Length Above	2.0	10.0	55.0	200.0
Length Up to	10.0	50.0	200.0	300.0
Tolerance	+/- 0.25	+/- 0.5	+/- 0.75	+/- 1.0

DIN En ISO 8733 - 1998 (Same as ISO 8733-1997) Unhardened & Ground Pin with Internal Thread

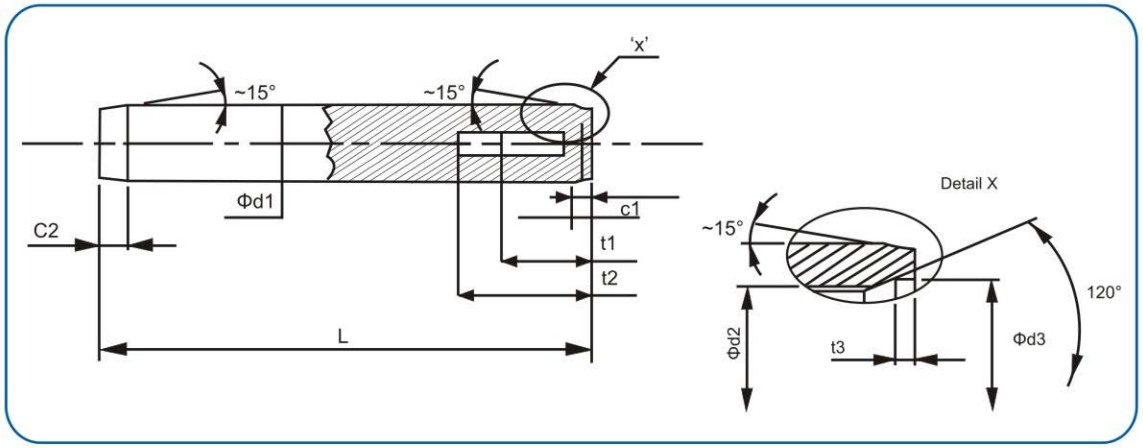

Specification	DIN EN ISO 8733 : 1998
	(Revised Version of Din 7979C & DIN En 28733-1992)
Material	Free Cutting Steel
	Austenitic Stainless Steel (AISI 302/303/304/316)
Hardness	Free Cutting Steel : 125 - 245 HV30
	Austenitic Stainless Steel : 210 - 280 HV30
Note (a)	Dia 4 , 5 & 14 are not specified in DIN En ISO 8733 however these sizes are supplied as per LPS norms in line with Din En ISO 8733
(b)	Internal Thread Length "t1" & Drill Depth "t2" for length less than min. specified in DIN En ISO 8733 will be as per LPS Norm. For example, pin of length 12 mm of dia 10.0mm, will have Thread depth 4.0mm (against 10mm) and drill depth will be 10.5 Max. (against 16 Min.)

Range & General Specifications

Diameter "d1" Tol. m6" (Interference Fit)	Nominal	* 4.0	* 5.0	6.0	8.0	10.0	12.0	14.0	16.0	20.0	25.0	30.0	40.0	50.0
	Max.	4.012	5.012	6.012	8.015	10.015	12.018	14.018	16.018	20.021	25.021	30.008	40.009	50.009
	Min.	4.004	5.004	6.004	8.006	10.006	12.007	14.007	16.007	20.008	25.008	30.021	40.025	50.025
Chamfer "c1"	Approx	0.6	0.6	0.8	1.0	1.2	1.6	1.8	2.0	2.5	3.0	4.0	5.0	6.3
Chamfer 'c2'	Approx	0.8	1.0	1.2	1.6	2.0	2.5	2.8	3.0	3.5	4.0	5.0	6.3	8.0
Internal threads 'd2'	Class -6H	M2	M3	M4	M5	M6	M6	M8	M8	M10	M16	M20	M20	M24
Thread Pitch 'P'		0.4	0.5	0.7	0.8	1	1	1.25	1.25	1.5	2	2.5	2.5	3
Tap length 't1'	Approx	3.5	5	6	8	10	12	12	16	18	24	30	30	36
Drill length 't2'	Min.	6	8	10	12	16	20	20	25	28	35	40	40	50
Length 't3'	Approx	0.5	1	1	1.2	1.2	1.2	1.2	1.5	1.5	2	2	2.5	2.5
Dia 'd3'	Approx	2.2	3.3	4.3	5.3	6.4	6.4	8.4	8.4	10.5	17	21	21	25
Standard Range of Length 'L'	Max.	40	50	60	80	100	120	140	160	200	200	200	200	200
	Min.	16	16	16	18	22	26	28	32	40	50	60	80	100
LPS Range of Length 'L'	Max.	45	60	80	100	120	150	150	200	250	250	250	280	280
	Min.	8	10	10	10	12	14	18	18	24	36	45	70	90

Tolerance on Length 'L'

Length Above	3.0	10.0	50.0	200.0
Length Up to	10.0	50.0	200.0	300.0
Tolerance	+/- 0.25	+/- 0.5	+/- 0.75	+/-1.00

DIN EN ISO 8734:1998 (Same as ISO 8734-1997) Hardened & Ground Dowel Pin

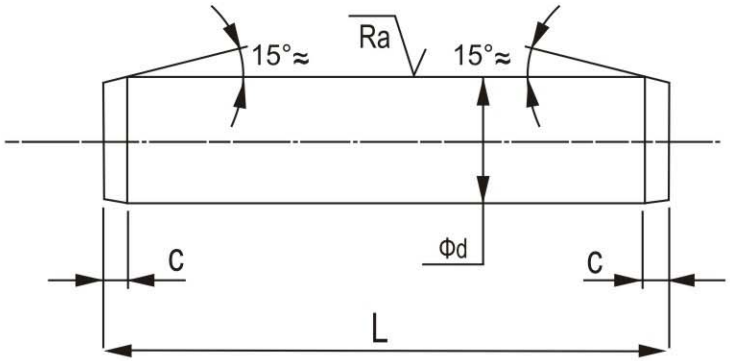

Specification	DIN EN ISO 8734 : 1998	
	(Revised Version of Din 6325-1971 & DIN En 28734-1992)	
Material & Heat Treatment	Type A	High Grade Alloy Steel-100Cr6 Through Hardened-52 to 58 HRC
	Type B	Low Carbon Case Hardening Steel with Case Hardness 55-61 HRC, Case depth 0.25 Min
Surface Roughness	Ra≤ 0.8	
Note	Pin from Martensitic Stainless Steel (AISI 416) with hardness 36-42 HRC can be supplied against order	

Range & General Specifications

Diameter "d" for Tol. Class m6	Nominal	**1.5**	**2.0**	**2.5**	**3.0**	**4.0**	**5.0**	**6.0**	**8.0**	**10.0**	**12.0**	**16.0**	**20.0**
	Max.	1.508	2.008	2.508	3.008	4.012	5.012	6.012	8.015	10.015	12.018	16.018	20.021
	Min.	1.502	2.002	2.502	3.002	4.004	5.004	6.004	8.006	10.006	12.007	16.007	20.008
Chamfer "C"	Approx	0.30	0.35	0.40	0.50	0.63	0.80	1.20	1.60	2.00	2.50	3.00	3.50
Standard Range of Length 'L'	Max.	16	20	24	30	40	50	60	80	100	100	100	100
	Min.	4	5	6	8	10	12	14	18	22	26	40	50
LPS Range of Length 'L'	Max.	30	40	40	60	60	60	100	120	120	120	150	150
	Min.	4	5	6	8	10	12	14	18	22	26	40	50

Tolerance on Length 'L'

Length Above	3.0	10.0	50.0	100.0
Length Up to	10.0	50.0	100.0	150.0
Tolerance	+/- 0.25	+/- 0.5	+/- 0.75	+/-1.00

DIN En ISO 8735 - 1998 (Same as ISO 8735-1997) Hardened & Ground Pin with Internal Thread

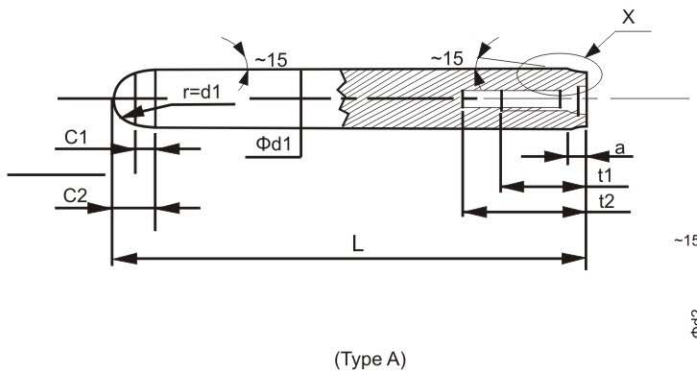

(Type A)

Specification	DIN EN ISO 8735 : 1998	
	(Revised Version of Din 7979D & DIN En 28735-1992)	
Material & Heat Treatment	Type A	High Grade Alloy Steel-100Cr6 Through Hardened-52 to 58 HRC
	Type B	Low Carbon Case Hardening Steel with Case Hardness 55-61 HRC, Case depth 0.25 Min
Note (a)	Dia 4, 5 & 14 are not specified in DIN En ISO 8735 however these sizes are supplied as per LPS Norm in line with Din En ISO 8735	
(b)	Internal Thread Length "t1" & Drill Depth "t2" for Length less than min. specified in DIN En ISO 8735 will be as per LPS Norm. For example: pin of length 12mm of dia 10.0mm, will have Thread depth 4.0mm (against 10mm) and drill depth will be 10.5 Max. (against 16 Min.)	
(c)	Pin from Martensitic Stainless Steel (AISI 416) with hardness 36-42 HRC can be supplied against order	

Range & General Specifications

Diameter "d1" Tol. m6"	Nominal	* 4.0	* 5.0	6.0	8.0	10.0	12.0	14.0	16.0	20.0	25.0	30.0	40.0	50.0
	Max.	4.012	5.012	6.012	8.015	10.015	12.018	14.018	16.018	20.021	25.021	30.008	40.009	50.009
	Min.	4.004	5.004	6.004	8.006	10.006	12.007	14.007	16.007	20.008	25.008	30.021	40.025	50.025
Chamfer "a"	Approx	0.6	0.6	0.8	1.0	1.2	1.6	1.8	2.0	2.5	3.0	4.0	5.0	6.3
Chamfer 'c1'	Approx	0.4	0.5	0.6	0.8	1.0	1.2	1.4	1.6	2.0	2.5	3.0	4.0	5.0
Crown & Chamfer 'c2'	Approx	1.4	1.5	2.1	2.6	3.0	3.8	4.0	4.6	6.0	6.0	7.0	8.0	10.0
Internal threads 'd2'	Class -6H	M2	M3	M4	M5	M6	M6	M8	M8	M10	M16	M20	M20	M24
Thread Pitch 'P'		0.4	0.5	0.7	0.8	1	1	1.25	1.25	1.5	2	2.5	2.5	3
Radius 'r'	Approx	4.0	5.0	6.0	8.0	10.0	12.0	14.0	16.0	20.0	25.0	30.0	40.0	50.0
Tap Length 't1'	Approx	3.5	5	6	8	10	12	12	16	18	24	30	30	36
Drill Length 't2'	Min.	6	8	10	12	16	20	20	25	28	35	40	40	50
Length 't3'		0.5	1	1	1.2	1.2	1.2	1.2	1.5	1.5	2	2	2.5	2.5
Dia 'd3'		2.2	3.3	4.3	5.3	6.4	6.4	8.4	8.4	10.5	17	21	21	25
Standard Range of Length 'L'	Max.	40	50	60	80	100	120	140	160	200	200	200	200	200
	Min.	16	16	16	18	22	26	28	32	40	50	60	80	100
LPS Range of Length 'L'	Max.	45	60	80	100	120	150	150	200	250	250	250	280	280
	Min.	8	10	10	10	12	14	18	18	24	36	45	70	90

Tolerance on Length 'L'

Length Above	3.0	10.0	50.0	200.0
Length Up to	10.0	50.0	200.0	300.0
Tolerance	+/- 0.25	+/- 0.5	+/- 0.75	+/-1.00

DIN EN 28736 - 1992 (Same as ISO 8736-1986) Unhardened Taper Pin with Internal Thread

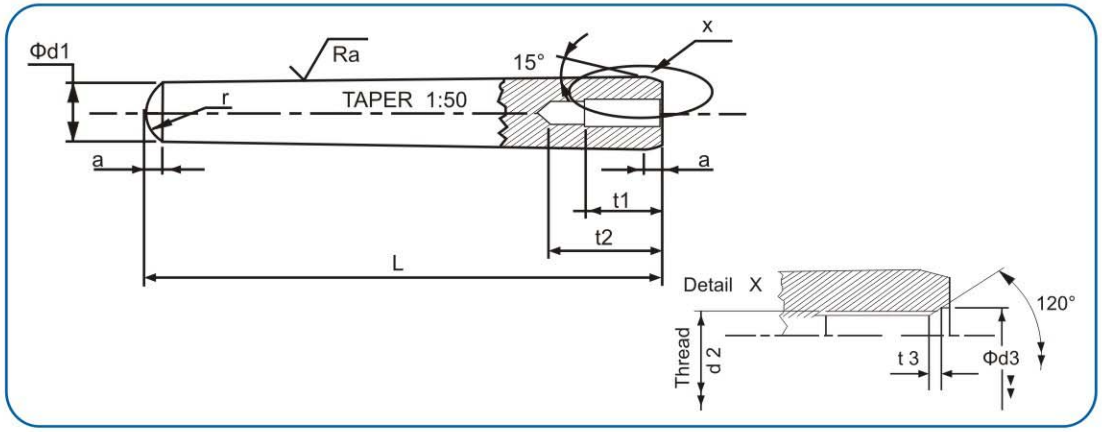

Specification	DIN EN 28736 - 1992
	Revised Version of DIN 7978 - 1977
Material	Free Cutting Steel
	Austenitic Stainless Steel (AISI 302/303/304/316)
Hardness	Free Cutting Steel : 125 - 245 HV30
	Austenitic Stainless Steel : 210 - 280 HV30
Surface Roughness	Ra < 0.8 (Or Rz=4) For Type A (Ground Pin)
	Ra < 3.2 (Or Rz=16) For Type B (Turned Pin)
Note (a)	Dia 14 is not specified in DinEn28736, however it is included in line with DinEn28736
(b)	Internal Thread Length "t1" & Drill Depth "t2" for Length less than min. specified in DIN En ISO 8733 will be as per LPS Norm. For example, pin of length 12 mm of dia 10.0mm, will have Thread depth 4.0mm (against 10mm) and drill depth will be 10.5 Max. (against 16 Min.)

Range & General Specifications

Diameter "d1" Tolerance "h10"	Nominal	**6.0**	**8.0**	**10.0**	**12.0**	**14.0**	**16.0**	**20.0**	**25.0**	**30.0**	**40.0**	**50.0**
	Max.	6.000	8.000	10.000	12.000	14.000	16.000	20.000	25.000	30.000	40.000	50.000
	Min.	5.952	7.942	9.942	11.930	13.930	15.930	19.916	24.916	29.916	39.900	49.900
Chamfer & Crown Zone "a"	Approx	0.8	1.0	1.2	1.6	1.8	2.0	2.5	3.0	4.0	5.0	6.3
End Crown Radius "r"	Approx	6.0	8.0	10.0	12.0	14.0	16.0	20.0	25.0	30.0	40.0	50.0
Internal threads 'd2'	Class -6H	M4	M5	M6	M8	M8	M10	M12	M16	M20	M20	M24
Thread Pitch 'P'		0.7	0.8	1	1.25	1.25	1.5	1.75	2	2.5	2.5	3
Tap length 't1'		6	8	10	12	12	16	18	24	30	30	36
Drill length 't2'	Min.	10	12	16	20	20	25	28	35	40	40	50
Length 't3'	Approx	1	1.2	1.2	1.2	1.2	1.5	1.5	2	2	2.5	2.5
Dia 'd3'	Approx	4.3	5.3	6.4	8.4	8.4	10.5	13	17	21	21	25
Standard Range of Length 'L'	Max.	55	90	110	130	140	180	250	250	250	250	250
	Min.	16	20	24	28	28	32	36	45	55	90	110
LPS Range of Length 'L'	Max.	80	100	120	150	150	200	250	250	250	280	280
	Min.	10	16	16	16	18	18	24	36	45	70	90

Tolerance on Length 'L'

Length Above	10.0	50.0	200.0
Length Up to	50.0	200.0	300.0
Tolerance	+/- 0.50	+/- 0.75	+/- 1.00

DIN EN 28737 - 1992 (Same as ISO 8737-1986) Unhardened Taper PIN with External Thread

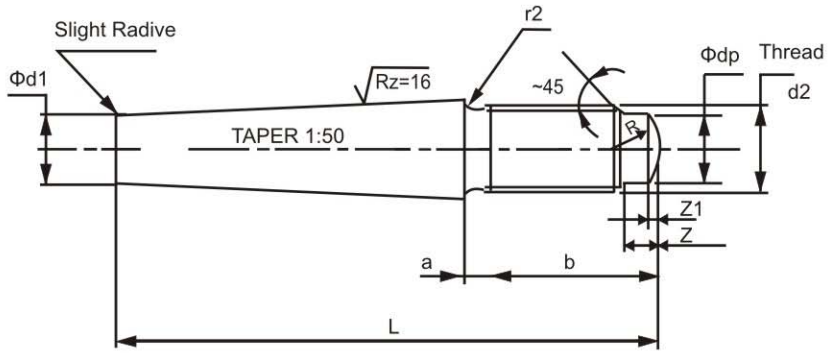

Specification	DIN EN 28737 - 1992
	(Revised Version of Din 7977-1977)
Material	Free Cutting Steel
	Austenitic Stainless Steel (AISI 302/303/304/316)
Hardness	Free Cutting Steel : 125 - 245 HV30
	Austenitic Stainless Steel : 210 - 280 HV30
Note (a)	Basic Length is equal to Total Length including the Thread Length "b"
(b)	Dia 14 is not specified in DinEn28737, however it is included in line with DinEn28737

Range & General Specifications

Diameter "d1" with Tol. h10"	Nominal	5.0	6.0	8.0	10.0	12.0	14.0	16.0	20.0	25.0	30.0	40.0	50.0
	Max.	5.000	6.000	8.000	10.000	12.000	14.000	16.000	20.000	25.000	30.000	40.000	50.000
	Min.	4.952	5.952	7.942	9.942	11.930	13.930	15.930	19.916	24.916	29.916	39.900	49.900
Thread Length 'b'	Max.	15.60	20.00	24.50	27.00	30.50	33.50	39.00	39.00	45.00	52.00	65.00	78.00
	Min.	14.00	18.00	22.00	24.00	27.00	30.00	35.00	35.00	40.00	46.00	58.00	70.00
Thread Size 'd2'		M5	M6	M8	M10	M12	M12	M16	M16	M20	M24	M30	M36
Thread Pitch 'P'	Coarse	0.80	1.00	1.25	1.50	1.75	1.75	2.00	2.00	2.50	3.00	3.50	4.00
Thread Run-out"a"	Max.	2.40	3.00	4.00	4.50	5.30	5.30	6.00	6.00	7.50	9.00	10.50	12.00
Junction Radius 'r'	Approx	0.6	0.6	0.6	1.0	1.0	1.0	1.6	1.6	1.6	2.5	2.5	4
Dog Point Dia 'dp'	Max.	3.50	4.00	5.50	7.00	8.50	8.50	12.00	12.00	15.00	18.00	23.00	28.00
	Min.	3.25	3.70	5.20	6.60	8.10	8.10	11.50	11.50	14.50	17.50	22.50	27.50
Crown Radius 'R'	Approx	3.5	4.0	5.5	7.0	8.5	8.5	12.0	12.0	15.0	18.0	23.0	28
Crown Zone Length 'Z1'	Approx	0.5	0.6	0.9	1.0	1.2	1.2	1.7	1.7	2.0	2.5	3.0	3.8
Dog Point Length 'Z'	Max.	1.50	1.75	2.25	2.75	3.25	3.25	4.30	4.30	5.30	6.30	7.90	9.40
	Min.	1.25	1.50	2.00	2.50	3.00	3.00	4.00	4.00	5.00	6.00	7.00	9.00
Standard Range of Length 'L'	Max.	50	60	75	100	140	140	160	190	250	280	320	360
	Min.	40	45	55	65	85	85	100	120	140	160	190	220
LPS Range of Length 'L'	Max.	60	80	100	140	180	180	200	250	300	300	350	400
	Min.	30	40	45	55	60	70	80	90	100	120	150	190

Tolerance on Length 'L'

Length Above	25.0	50.0	190.0
Length Up to	50.0	190.0	400.0
Tolerance	+/- 0.50	+/- 0.75	+/- 1.00

ANSI B 18.8.2 - 2000 Hardened & Ground Machine Dowel Pins - Standard Series (Basic Pin Diameter = Nominal + 0.0002 and Tolerance +/- 0.0001)

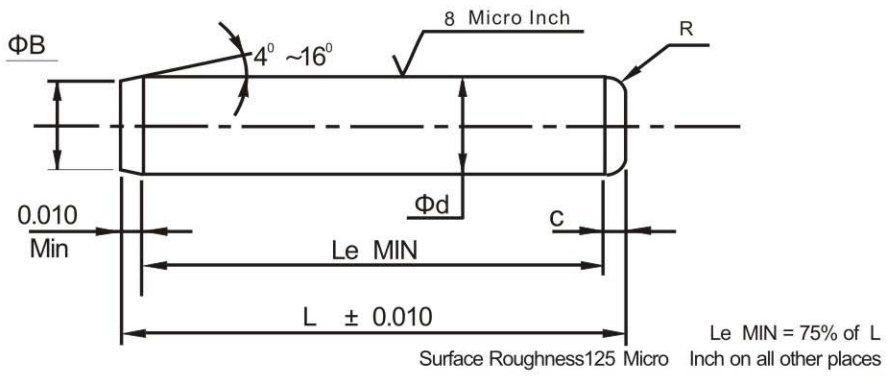

Specification	ANSI B 18.8.2 -2000
Material	High Carbon Alloy Steel "100Cr 6" / AISI 52100 inline with European Standards.
Hardness	Through Hardened & Temepered to 58-62 HRC inline with European Standards.
Surface Coating	The Zone of Diameter "d" as ground and other zone as Thermal Black. Rust preventive oil layer on all over the surfaces.
Note (a)	Case Hardened (as per ANSI B 18.8.2) Pin of Medium Carbon Alloy Steel can be supplied against order.
(b)	The Pin of Nominal length more than standard Max length will be supplied with Tolerance of +/- 0.015".
(c)	Chamfer Angle (4~16 Degree), and Crown Radius R as tabulated is applicable for length Min.-a. And for Length Minimum-b, the chamfer angle will be INCREASED and crown radius R will be reduced to maintain effective length as 75% min of basic length L as per the SCOPE of the standard ANSI B 18.8.2.

Range & General Specifications

Diameter "d" Standard series (For Oversize series See at the Bottom)	Nominal	1/16	5/64	3/32	1/8	5/32	3/16	1/4	5/16	3/8	7/16	1/2	5/8	3/4	7/8	1
	Basic	**0.0627**	**0.0783**	**0.0940**	**0.1252**	**0.1564**	**0.1877**	**0.2502**	**0.3127**	**0.3752**	**0.4377**	**0.5002**	**0.6252**	**0.7502**	**0.8752**	**1.0002**
	Max.	0.0628	0.0784	0.0941	0.1253	0.1565	0.1878	0.2503	0.3128	0.3753	0.4378	0.5003	0.6253	0.7503	0.8753	1.0003
	Min.	0.0626	0.0782	0.0939	0.1251	0.1563	0.1876	0.2501	0.3126	0.3751	0.4376	0.5001	0.6251	0.7501	0.8751	1.0001
Point Dia 'B'	Max.	0.058	0.074	0.089	0.120	0.150	0.180	0.240	0.302	0.365	0.424	0.486	0.611	0.735	0.860	0.980
	Min.	0.048	0.064	0.079	0.110	0.140	0.170	0.230	0.290	0.350	0.409	0.471	0.595	0.715	0.840	0.960
Crown Height 'C'	Max.	0.020	0.026	0.031	0.041	0.052	0.062	0.083	0.104	0.125	0.146	0.167	0.208	0.250	0.293	0.333
	Min.	0.008	0.010	0.012	0.016	0.020	0.023	0.031	0.039	0.047	0.055	0.063	0.078	0.094	0.109	0.125
Crown radius "R"	Max.	3/4	7/8	1	2	2	2	2 1/2	2 1/2	3	3	4	5	6	6	6
Standard Range of Length 'L'	Min.-a	1/4	1/4	5/16	3/8	3/8	1/2	5/8	3/4	3/4	7/8	1	1 1/4	1 1/2	2	2
	Min.-b	3/16	1/4	5/16	3/8	3/8	1/2	1/2	1/2	1/2	7/8	3/4	1 1/4	1 1/2	2	2
LPS Range of Length 'L'	Max.	1	1	1 1/4	2 1/2	2 1/2	2 1/2	3	3	4	4	6	8	8	10	12
	Min.	3/16	3/16	1/4	5/16	5/16	3/8	7/16	1/2	1/2	7/8	3/4	1 1/4	1 1/2	2	2

ANSI B 18.8.2 - 2000 Hardened & Ground Machine Dowel Pins (Oversize Series) (Basic pin diameter = Nominal + 0.0010 and tolerance +/- 0.0001)

Diameter "d" Standard series (For Oversize series See at the Bottom)	Nominal	1/16	5/64	3/32	1/8	5/32	3/16	1/4	5/16	3/8	7/16	1/2	5/8	3/4	7/8	1
	Basic	**0.0627**	**0.0783**	**0.0940**	**0.1252**	**0.1564**	**0.1877**	**0.2502**	**0.3127**	**0.3752**	**0.4377**	**0.5002**	**0.6252**	**0.7502**	**0.8752**	**1.0002**
	Max.	0.0628	0.0784	0.0941	0.1253	0.1565	0.1878	0.2503	0.3128	0.3753	0.4378	0.5003	0.6253	0.7503	0.8753	1.0003
	Min.	0.0626	0.0782	0.0939	0.1251	0.1563	0.1876	0.2501	0.3126	0.3751	0.4376	0.5001	0.6251	0.7501	0.8751	1.0001

All Other Dimensions & Detail as Per STANDARD Series

Unhardened & Ground Taper Dowel Pins Of Steel & Austenitic Stainless Steel As Per ANSI B 18.8.2-2000

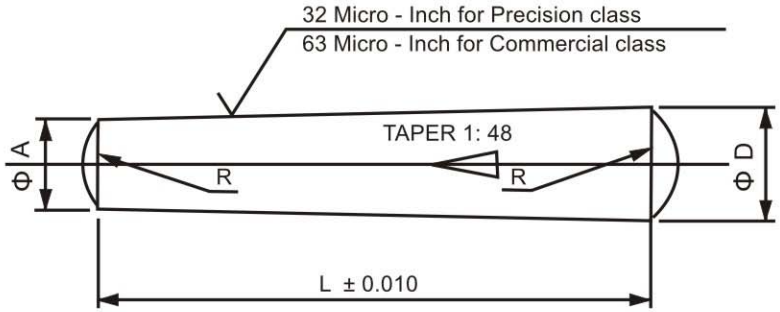

a- Nominal Length "L" is Excluding crown ends. Hence over all Length Including crown ends Will be more then nominal Length L
b- Small end diameter A depends on nominal length L

Specification	ANSI B 18.8.2 - 2000 (TAPER PINS)
Material	Free Cutting Steel like AISI 1211/ EN 1A / 9SMnPbK Equivalent
	Austenitic Stainless Steel (AISI 302/303/304/316)
Hardness (Not Specified In Standard)	For Free Cutting Steel 68-100 HRB as Per LPS Norm
	For Austenitic Stainless Steel 85-105 HRB as Per LPS Norm
Surface Coating	Pin of Free Cutting Steel PLAIN with RUST PREVENTIVE OIL All Over
	Pin of Autenitic Stainless Steel with PLAIN Finish
Taper & Surface Roughness	For Precision Class Pin the Taper is of 0.250 +/- 0.004 per FOOT (1:48). Surface rougness on all other surface as 125 Micro-inches
	For Commercial Class Pin the Taper is of 0.250 +/- 0.006 per FOOT (1:48). Surface rougness on all other surface as 125 Micro-inches

Range & General Specifications

PIN SIZE	Number & Basic Pin Diameter	# 7/0 (0.0625)	# 6/0 (0.0780)	#5/0 (0.0940)	# 4/0 (0.1090)	# 3/0 (0.1250)	# 2/0 (0.1410)	# 0 (0.1560)	#1 (0.1720)	#2 (0.1930)	#3 (0.2190)	#4 (0.2500)	#5 (0.2890)	#6 (0.3410)	#7 (0.4090)	#8 (0.4920)	#9 (0.5910)	#10 (0.7060)	#11 (0.8600)
Diameter "d" for Precision Class	Max.	0.0635	0.0790	0.0950	0.1100	0.1260	0.1420	0.1570	0.1730	0.1940	0.2200	0.2510	0.2900	0.3420	0.4100	0.4930	0.5920	0.7070	Not Specified
	Min.	0.0625	0.0780	0.0940	0.1090	0.1250	0.1420	0.1560	0.1720	0.1930	0.2190	0.2500	0.2890	0.3410	0.4090	0.4920	0.5910	0.7060	
Diameter "d" for Commercial Class	Max.	0.0638	0.0793	0.0953	0.1103	0.1263	0.1423	0.1573	0.1733	0.1943	0.2203	0.2513	0.2903	0.3423	0.4103	0.4933	0.5923	0.7073	0.8613
	Min.	0.0618	0.0773	0.0933	0.1083	0.1243	0.1403	0.1553	0.1713	0.1923	0.2183	0.2493	0.2883	0.3403	0.4083	0.4913	0.5903	0.7053	0.8593
Crown Radius '"R"	Max.	0.072	0.088	0.104	0.119	0.135	0.151	0.166	0.182	0.203	0.229	0.260	0.299	0.351	0.419	0.502	0.601	0.716	0.870
	Min.	0.052	0.068	0.084	0.099	0.115	0.131	0.146	0.162	0.183	0.209	0.240	0.279	0.331	0.399	0.482	0.581	0.696	0.850
Standard Range of Length 'L'	Max.	1	1 1/2	1 1/2	2	2	2 3/4	3	3	3	4	4	6	6	8	8	8	8	8
	Min.	1/4	1/4	1/4	1/4	1/4	1/2	1/2	3/4	3/4	3/4	3/4	1	1 1/4	1 1/4	1 1/4	1 1/4	1 1/2	2
LPS Range of Length 'L'	Max.	1	1 1/2	2	2 1/2	2 1/2	3	3 1/2	3 1/2	3 1/2	4 1/2	4 1/2	7	7	8	8	9	9	9
	Min.	1/4	1/4	1/4	1/4	1/4	3/8	3/8	1/2	1/2	1/2	5/8	5/8	3/4	3/4	3/4	1	1	1

LPS NORM 1002 - Through Hardened & Ground PULL DOWEL Pins (All dimensions are in INCHES)

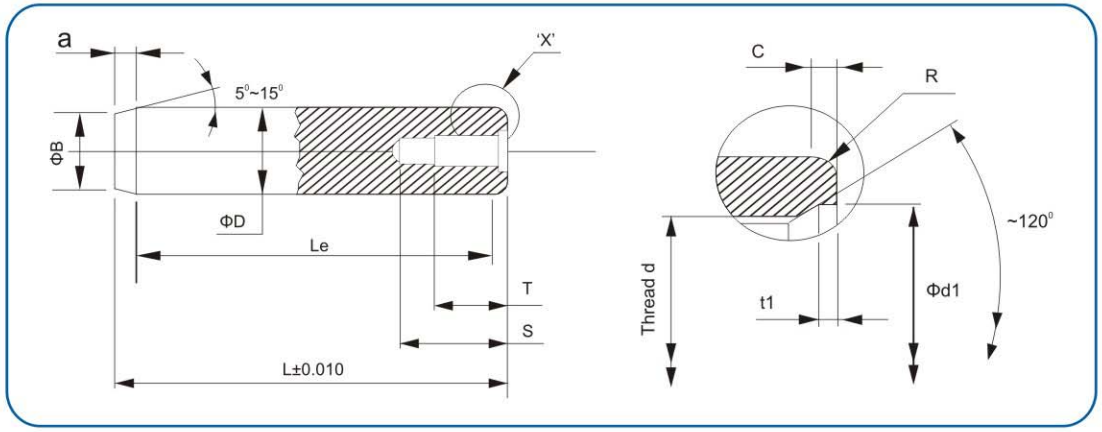

Specification	LPS 1002
Material	High Grade Alloy Steel
	AISI 52100 (100Cr 6)
Heat Treatment	Through Hardened & Tempered
	Hardness 58-62 HRC
Note (a)	Length Shorter than minimum specified either may be drilled through or Thread depth T may be less than min.
(b)	Chamfer angle 5 to 15 Degree is considered to maintain effective length (Le) as 75% of nominal Length
(c)	Surface Roughness on Pin Diameter D is 8 Microinch and 125 microinch on all other surfaces.

Range & General Specifications

PIN Diameter "D"	Nominal	1/4"	5/16"	3/8"	7/16"	1/2"	5/8"	3/4"	7/8"	1"
	Max.	0.2503	0.3128	0.3753	0.4378	0.5003	0.6253	0.7503	0.8753	1.0003
	Min.	0.2501	0.3126	0.3751	0.4376	0.5001	0.6251	0.7501	0.8751	1.0001
Point Diameter 'B'	Max.	0.236	0.299	0.362	0.417	0.48	0.605	0.725	0.85	0.975
	Min.	0.224	0.287	0.350	0.405	0.468	0.590	0.710	0.835	0.960
Thread Size "d"		# 8 - 32 UNC - 2B	#10 - 32 UNF - 2B	#10-32 UNF- 2B	#10-32 UNF - 2B	1/4 - 20 UNC -2B	1/4 - 20 UNC -2B	5/16-18 UNC-2B	3/8 - 16 UNC - 2B	3/8 - 16 UNC - 2B
Pointing Length 'a'	Min.	0.030	0.034	0.037	0.045	0.045	0.045	0.058	0.058	0.058
Thread Depth "T"	Min.	0.215	0.255	0.255	0.255	0.350	0.350	0.425	0.425	0.425
Drill Depth "S"	Max.	0.455	0.575	0.575	0.575	0.660	0.660	0.785	0.785	0.785
Crown Radius "R"	Min.	0.031	0.04	0.055	0.063	0.078	0.094	0.105	0.125	160
Cown Length "C"	Max.	0.075	0.100	0.115	0.135	0.160	0.195	0.245	0.270	0.300
Counter Diameter 'd1'	Max.	0.180	0.210	0.210	0.210	0.275	0.275	0.345	0.410	0.410
	Min.	0.168	0.195	0.195	0.195	0.260	0.260	0.325	0.390	0.390
Drill Counter Depth 't1'	Max.	0.047	0.060	0.060	0.060	0.065	0.065	0.065	0.070	0.070
	Min.	0.025	0.032	0.032	0.032	0.045	0.045	0.045	0.050	0.050
Double Shear Strength	lbf	14730	23000	33150	45090	58920	92040	132540	180390	235620
Recommended Hole Size	Max.	0.2500	0.3125	0.3750	0.4375	0.5000	0.6250	0.7500	0.8750	1.0000
	Min.	0.2495	0.3120	0.3475	0.4370	0.4995	0.6245	0.7495	0.8745	0.9995
LPS Range of Length 'L'	Max.	2	2 1/2	3	3	4	5	6	6	6
	Min.	3/4	3/4	7/8	7/8	1	1 1/4	1 1/2	1 3/4	1 3/4

LPS NORM 1015 - (PRESS FIT) Parallel Pins of AUSTENITIC STAINLESS STEEL (All dimensions are in INCHES)

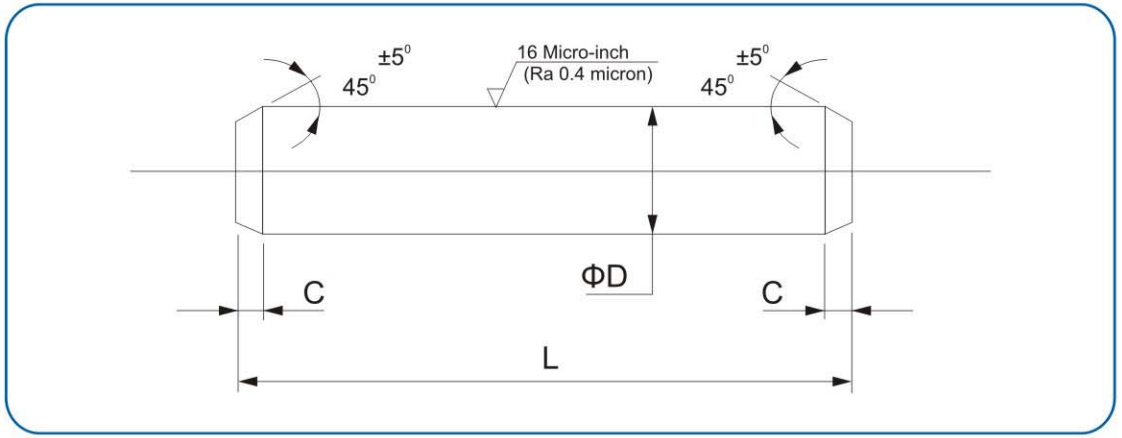

Specification	LPS 1015
Material	Austenitic Stainless Steel
	AISI 304 (W.Nr 1.4301) and AISI 316 (W.Nr 1.4401)
Hardness	200-300 Hv 30 (90-104 HRB)
Surface Roughness	16 Micro-inch (Ra=0.4 Micron) on Ground Cylindrical Zone and 125 Micro-inche (Ra=3.2) on all other Machined Zone.

Range & General Specifications

Diameter "D"	Nominal	1/16"	5/64"	3/32"	1/8"	5/32"	3/16"	1/4"	5/16"	3/8"	1/2"	5/8"	3/4"	7/8"	1"
	Max.	0.0628	0.0784	0.0941	0.1253	0.1565	0.1878	0.2503	0.3128	0.3753	0.5003	0.6253	0.7503	0.8753	1.0003
	Min.	0.0626	0.0782	0.0939	0.1251	0.1563	0.1876	0.2501	0.3126	0.3751	0.5001	0.6251	0.7501	0.8751	1.0001
Chamfer Length 'C'	Max.	0.030	0.030	0.030	0.030	0.030	0.030	0.030	0.040	0.040	0.040	0.040	0.050	0.050	0.050
	Min.	0.010	0.010	0.010	0.010	0.010	0.010	0.010	0.015	0.015	0.015	0.015	0.025	0.025	0.025
Double Shear Strength	Lbf	340	520	750	1330	2075	2990	5310	8290	11935	21215	33150	47725	64960	84840
LPS Range of Length 'L'	Max.	1 1/2"	1 1/2"	1 7/8	2"	2"	2"	2 1/2"	3"	4"	5"	6"	6"	6"	6"
	Min.	1/4"	1/4"	1/4"	1/4"	1/4"	1/4"	5/16"	5/16"	3/8"	1/2"	5/8"	3/4"	7/8"	1"

Tolerance on Length 'L'

Length Up to	1 1/2"	1 1/2" to 4"	4" to 6"
Tolerance	+ / - 0.010	+ / - 0.015	+ / - 0.025

LPS NORMS 1018 - Parallel Pins (SLIP FIT) of AUSTENITIC STAINLESS STEEL (All dimensions are in INCHES)

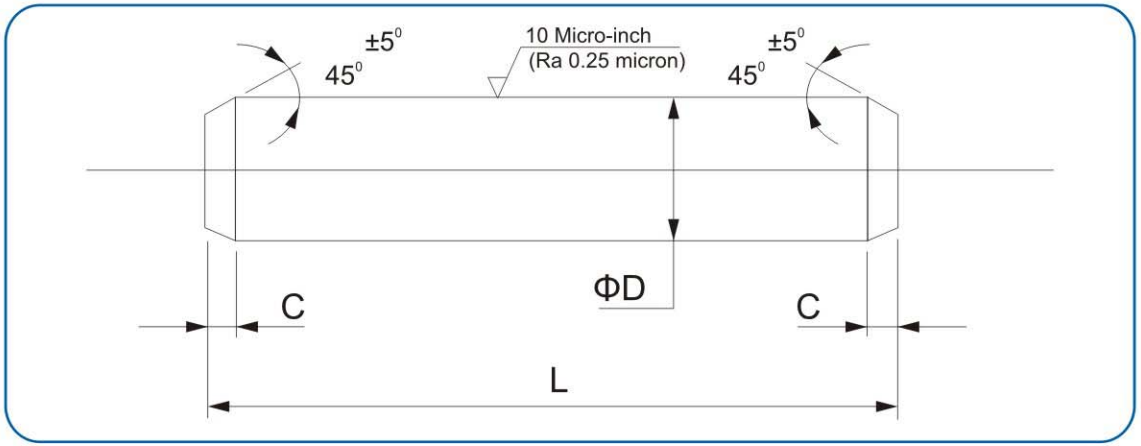

Specification	LPS 1018
Material	Austenitic Stainless Steel
	AISI 304 (W.Nr 1.4301)
Hardness	200-300 HV 30 (90-104 HRB)
Surface Roughness	10 Micro-inch (Ra=0..25 Micron) on Ground Cylindrical Zone and 125 Micro-inch (Ra=3.2) on all other Machined Zone.

Range & General Specifications

Diameter "D"	Nominal	1/32"	1/16"	5/64"	3/32"	1/8"	5/32"	3/16"	7/32"	1/4"	5/16"	3/8"	1/2"	5/8"	3/4"
	Max.	0.0313	0.0626	0.0781	0.0938	0.1251	0.1562	0.1875	0.2187	0.2500	0.3125	0.3750	0.5000	0.6250	0.7500
	Min.	0.0311	0.0624	0.0779	0.0936	0.1249	0.1560	0.1873	0.2185	0.2498	0.3123	0.3748	0.4998	0.6248	0.7498
Chamfer Length 'C'	Max.	0.018	0.018	0.018	0.018	0.018	0.018	0.018	0.018	0.018	0.018	0.018	0.018	0.025	0.025
	Min.	0.010	0.010	0.010	0.010	0.010	0.010	0.010	0.010	0.010	0.010	0.010	0.010	0.015	0.015
Double Shear Strength	Lbf	82	340	520	750	1330	2075	2990	4050	5300	8275	11915	22190	33110	47690
LPS Range of Length 'L'	Max.	5/8 "	1 "	1 "	1 "	1 1/2"	2"	2"	2 1/2"	2 1/2"	2 1/2"	3"	5"	5"	5"
	Min.	1/8"	1/8"	1/8"	1/8"	3/16"	3/16"	1/4"	1/4"	1/4"	5/16"	5/16"	3/8"	1/2"	5/8"

Tolerance on Length 'L'

Length Up to	1 1/2"	1 1/2" to 4"	4" to 6"
Tolerance	+ / - 0.010	+ / - 0.015	+ / - 0.025

LPS NORM 1036- Hardened & Ground Machine Dowel Pins of Corossion Resistant (Martensitic Stainless Steel) - Basic pin diameter = Nominal + 0.0002 and tolerance +/- 0.0001)

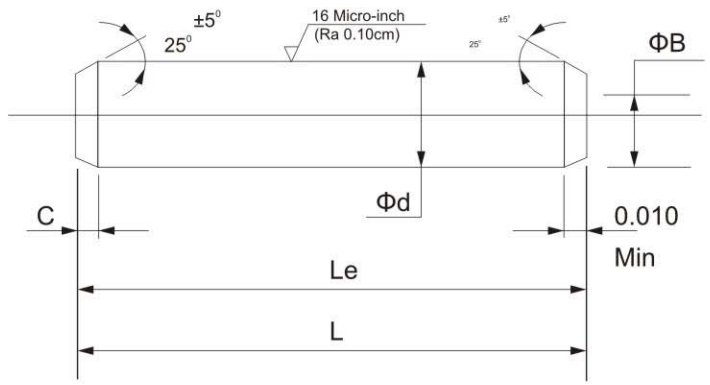

Specification	LPS 1036 (In line with NASM 16555 with dash No 601 to 744)
Material	Matrensitic Corossion Resistance Steel AISI 416
Hardness	Through Hardened & temepered to 36-42 HRC
Surface Coating	The zone of Diameter "d" as Ground and other zone as **Thermal Black.** Rust preventive Oil Layer on all over the surfaces.
Note (a)	However the Pin Diameter & Mechnical properties of these pins are same as MS-16555 with Dash N0 601 to 744, LPS Pins are not conforms to DFARS as source of the material AISI 416 (Speciality Metals) is not from qualifying countries listed under Clause 225.872.12 of DFARS.
(b)	The Pin of Nominal Length more than Standard Max. length will be supplied with tol. of +/- 0.015".
(c)	Chamfer Angle (4~12 Degree), and Crown Chamfer 'C' as tabulated is applicable for length Min.-a And for Length Min.-b,the chamfer angle will be INCREASED and crown Chamfer C will be reduced to maintain effective length as 75% min. of basic Length 'L'.
(d)	Surface roughness 16-Micro-inch max is applicable for ground cylindrical surface of length Le,other zone will have surface roughness 125 Micro-inch max.
(e)	As the martensitic Microstructure is much reactive with passivation solution(Nitric acid) the pins are not PASSIVATED . But a good quality of Rust preventive oil is applied all over to protect the PIN from corrossion.

Range & General Specifications

Diameter "d" Standard series (For Oversize series See at the Bottom)	Nominal	1/16 (0.0625)	5/64 (0.0781)	3/32 (0.0938)	1/8 (0.1250)	5/32 (0.1562)	3/16 (0.1875)	1/4 (0.2500)	5/16 (0.3125)	3/8 (0.3750)	7/16 (0.4375)	1/2 (0.5000)	5/8 (0.6250)	3/4 (0.7500)	7/8 (0.8750)	1 (1.0000)
	Basic	**0.0627**	**0.0783**	**0.0940**	**0.1252**	**0.1564**	**0.1877**	**0.2502**	**0.3127**	**0.3752**	**0.4377**	**0.5002**	**0.6252**	**0.7502**	**0.8752**	**1.0002**
	Max.	0.0628	0.0784	0.0941	0.1253	0.1565	0.1878	0.2503	0.3128	0.3753	0.4378	0.5003	0.6253	0.7503	0.8753	1.0003
	Min.	0.0626	0.0782	0.0939	0.1251	0.1563	0.1876	0.2501	0.3126	0.3751	0.4376	0.5001	0.6251	0.7501	0.8751	1.0001
Point Dia 'B'	Max.	0.058	0.074	0.089	0.120	0.150	0.180	0.240	0.302	0.365	0.424	0.486	0.611	0.735	0.860	0.980
	Min.	0.048	0.064	0.079	0.110	0.140	0.170	0.230	0.290	0.350	0.409	0.471	0.595	0.715	0.840	0.960
Crown Chamfer "C"	Max.	0.020	0.026	0.031	0.041	0.052	0.062	0.083	0.104	0.125	0.146	0.167	0.208	0.250	0.293	0.333
	Min.	0.008	0.010	0.012	0.016	0.020	0.023	0.031	0.039	0.047	0.055	0.063	0.078	0.094	0.109	0.125
Standard Range of length 'L'	Max.	3/4	7/8	1	1 1/2	1 1/2	1 1/2	2	2 1/2	3	3	4	5	6	6	6
	Min.-a	1/4	1/4	5/16	3/8	3/8	1/2	5/8	3/4	3/4	7/8	1	1 1/4	1 1/2	2	2
	Min.-b	3/16	1/4	5/16	3/8	3/8	1/2	1/2	1/2	1/2	7/8	3/4	1 1/4	1 1/2	2	2
LPS Range of Length 'L'	Max.	**1**	**1**	**1 1/4**	**2 1/2**	**2 1/2**	**2 1/2**	**3**	**3**	**4**	**4**	**6**	**8**	**8**	**8**	**8**
	Min.	**3/16**	**3/16**	**1/4**	**5/16**	**5/16**	**3/8**	**7/16**	**1/2**	**1/2**	**7/8**	**3/4**	**1 1/4**	**1 1/2**	**2**	**2**

ANNEXUTRE-A (SHEAR STRENGTH OF DOWEL PIN)

Hardened & Ground Dowel Pin INCH SERIES as per ANSI B 18.8.2-1978 & ANSI B 18.8.2-2000

Size Inch Fraction	Size Inch Decimal	Area Sq Inch	Double Shear Load ANSI 18.8.2-1978			Single Shear Load ANSI 18.8.2-2000			Calculated Single Shear Strength
			Pounds	Newtons*	Kgf*	Pounds	Newtons*	Kgf*	PSI
1/16	0.062500	0.0030680	**800**	3563	363	**400**	1781	182	130379
5/64	0.078125	0.0047937	**1240**	5523	563	**620**	2761	281	129336
3/32	0.093750	0.0069029	**1800**	8017	817	**900**	4008	409	130379
1/8	0.125000	0.0122719	**3200**	14252	1453	**1600**	7126	726	130379
5/32	0.156250	0.0191748	**5000**	22269	2270	**2500**	11134	1135	130379
3/16	0.187500	0.0276117	**7200**	32067	3269	**3600**	16033	1634	130379
1/4	0.250000	0.0490875	**12800**	57008	5811	**6400**	28504	2906	130379
5/16	0.312500	0.0766992	**20000**	89075	9080	**10000**	44537	4540	130379
3/8	0.375000	0.1104469	**28700**	127822	13030	**14350**	63911	6515	129927
7/16	0.437500	0.1503305	**39100**	174141	17751	**19550**	87071	8876	130047
1/2	0.500000	0.1963500	**51000**	227141	23154	**25500**	113570	11577	129870
5/8	0.625000	0.3067969	**79800**	355408	36229	**39900**	177704	18115	130053
3/4	0.750000	0.4417875	**114000**	507726	51756	**57000**	253863	25878	129021
7/8	0.875000	0.6013219	**156000**	694783	70824	**78000**	347392	35412	129714
1	1.000000	0.7854000	**204000**	908563	92616	**102000**	454281	46308	129870

Double Shear Load & Single Shear Load in pounds are exactly as per ANSI B 18.8.2-1978 & ANSI B 18.8.2-2000, But Load in Newtons & Kgf are Calculated

* Shear Load in Newtons & Kgf are calculated from value specified in POUNDS

ANNEXUTRE-B (SHEAR STRENGTH OF DOWEL PIN)

Hardened & Ground Dowel Pin METRIC SERIES as per ANSI B 18.8.5M-1994

Size mm	Area Sq mm	Double Shear Load			Single Shear Load			Calculated Single Shear Strength
		Pounds*	Newtons*	Kgf*	Pounds*	Newtons	Kgf*	Mpa
1.5	1.767	835	3720	379	418	**1860**	190	1053
2.0	3.142	1482	6600	673	741	**3300**	336	1050
2.5	4.909	2313	10300	1050	1156	**5150**	525	1049
3.0	7.069	3323	14800	1509	1662	**7400**	754	1047
4.0	12.566	5928	26400	2691	2964	**13200**	1346	1050
5.0	19.635	9251	41200	4200	4625	**20600**	2100	1049
6.0	28.274	13337	59400	6055	6669	**29700**	3028	1050
8.0	50.266	23576	105000	10703	11788	**52500**	5352	1044
10.0	78.540	37048	165000	16820	18524	**82500**	8410	1050
12.0	113.098	53438	238000	24261	26719	**119000**	12130	1052
16.0	201.062	94752	422000	43017	47376	**211000**	21509	1049
20.0	314.160	148190	660000	67278	74095	**330000**	33639	1050
25.0	490.875	231266	1030000	104995	115633	**515000**	52497	1049

Single Shear Load in NEWTONS is exactly as per ANSI B 18.8.5M-1974. This is also applicable for through Hardened & Ground Alloy Steel Dowel Pin (58-62 HRC) Din 6325/ISO 8734 Type A. (However Din 6325/ISO 8734 are not specifying the shear strength)

* But Load in Pounds & Kgf are calculated. Double shear load in all units is calculated

ANNEXUTRE-C (SHEAR STRENGTH OF DOWEL PIN)

UN-HARDENED & Ground Carbon Steel Dowel Pin INCH SERIES as per ANSI B 18.8.2-2000

Size Inch Fraction	Size Inch Decimal	Area Sq Inch	Double Shear Load ANSI 18.8.2-2000			Single Shear Load ANSI 18.8.2-2000			Calculated Single Shear Strength
			Pounds	Newtons*	Kgf*	Pounds*	Newtons*	Kgf*	PSI
1/16	0.062500	0.0030680	**350**	1559	159	**175**	779	79	57041
5/64	0.078125	0.0047937	**550**	2450	250	**275**	1225	125	57367
3/32	0.093750	0.0069029	**820**	3652	372	**410**	1826	186	59395
7/64	0.109375	0.0093957	**1130**	5033	513	**565**	2516	257	60134
1/8	0.125000	0.0122719	**1490**	6636	676	**745**	3318	338	60708
5/32	0.156250	0.0191748	**2350**	10466	1067	**1175**	5233	533	61278
3/16	0.187500	0.0276117	**3410**	15187	1548	**1705**	7594	774	61749
7/32	0.218750	0.0375826	**4660**	20754	2116	**2330**	10377	1058	61997
1/4	0.250000	0.0490875	**6120**	27257	2778	**3060**	13628	1389	62338
5/16	0.312500	0.0766992	**9590**	42711	4354	**4795**	21356	2177	62517
3/8	0.375000	0.1104469	**13850**	61684	6288	**6925**	30842	3144	62700
7/16	0.437500	0.1503305	**18900**	84176	8581	**9450**	42088	4290	62862
1/2	0.500000	0.1963500	**24720**	110096	11223	**12360**	55048	5611	62949
5/8	0.625000	0.3067969	**38710**	172404	17574	**19355**	86202	8787	63087
3/4	0.750000	0.4417875	**55840**	248697	25351	**27920**	124348	12676	63198
7/8	0.875000	0.6013219	**76090**	338885	34545	**38045**	169443	17272	63269
1	1.000000	0.7854000	**99460**	442969	45155	**49730**	221484	22577	63318

Double Shear Load in pounds are exactly as per ANSI B 18.8.2-2000, But Load in Newtons & Kgf are Calculated

* Single Shear Load in Pounds, Newtons & Kgf are calculated from value specified for Doble shear load. Also Double shear load in Newtons & Kgf are calculated

ANNEXUTRE-D (SHEAR STRENGTH OF DOWEL PIN)

UN-HARDENED & Ground Low Carbon (Free Cutting) Steel Dowel Pin METRIC SERIES as per Din 7 (ISO2338)

Size mm	Area Sq mm	Double Shear Load			Single Shear Load			Calculated Single Shear Strength
		Pounds*	Newtons	Kgf*	Pounds*	Newtons*	Kgf*	Mpa
1.00	0.79	128	**570**	58	64	**285**	29	363
1.20	1.13	184	**820**	84	92	**410**	42	363
1.50	1.77	287	**1280**	130	144	**640**	65	362
2.00	3.14	507	**2260**	230	254	**1130**	115	360
2.50	4.91	795	**3540**	361	397	**1770**	180	361
3.00	7.07	1143	**5090**	519	571	**2545**	259	360
4.00	12.57	2032	**9050**	923	1016	**4525**	461	360
5.00	19.64	3175	**14140**	1441	1587	**7070**	721	360
6.00	28.27	4571	**20360**	2075	2286	**10180**	1038	360
8.00	50.27	8128	**36200**	3690	4064	**18100**	1845	360
10.00	78.54	12699	**56560**	5766	6350	**28280**	2883	360
12.00	113.10	18286	**81440**	8302	9143	**40720**	4151	360
14.00	153.94	24887	**110840**	11299	12443	**55420**	5649	360
16.00	201.06	32508	**144780**	14758	16254	**72390**	7379	360
20.00	314.16	50789	**226200**	23058	25394	**113100**	11529	360
25.00	490.88	79358	**353440**	36029	39679	**176720**	18014	360
30.00	706.86	114272	**508940**	51880	57136	**254470**	25940	360
40.00	1256.64	203151	**904780**	92230	101575	**452390**	46115	360

Double Shear Load in Newtons are exactly calculated on basis of Single Shear Strength of 360 Mpa, But Load in Pounds & Kgf are converted from Mpa-Din 7 or ISO 2338 do not specify any SHEAR LOAD, But LPS pins are meeting the above shear load.

* Single Shear Load in Pounds, Newtons & Kgf are calculated from value specified for Double shear load.

ANNEXUTRE-E (SHEAR STRENGTH OF DOWEL PIN)

UN-HARDENED & Ground Austenitic Steel (AISI 304 & 316) Dowel Pin INCH SERIES Double Chamfered as per LPS Norms 1015

Size Inch Fraction	Size Inch Decimal	Area Sq Inch	Double Shear Load ANSI 18.8.2-2000			Single Shear Load ANSI 18.8.2-2000			Considered Shear Strength as 60% of Tensile Strength
			Pounds**	Newtons*	Kgf*	Pounds**	Newtons*	Kgf*	PSI
1/16	0.062500	0.0030680	**357**	1590	162	**179**	795	81	58200
5/64	0.078125	0.0047937	**558**	2485	253	**279**	1243	127	58200
3/32	0.093750	0.0069029	**804**	3579	365	**402**	1789	182	58200
7/64	0.109375	0.0093957	**1094**	4871	497	**547**	2435	248	58200
1/8	0.125000	0.0122719	**1428**	6362	649	**714**	3181	324	58200
5/32	0.156250	0.0191748	**2232**	9941	1013	**1116**	4970	507	58200
3/16	0.187500	0.0276117	**3214**	14314	1459	**1607**	7157	730	58200
7/32	0.218750	0.0375826	**4375**	19483	1986	**2187**	9742	993	58200
1/4	0.250000	0.0490875	**5714**	25448	2594	**2857**	12724	1297	58200
5/16	0.312500	0.0766992	**8928**	39762	4053	**4464**	19881	2027	58200
3/8	0.375000	0.1104469	**12856**	57257	5837	**6428**	28629	2918	58200
7/16	0.437500	0.1503305	**17498**	77934	7944	**8749**	38967	3972	58200
1/2	0.500000	0.1963500	**22855**	101791	10376	**11428**	50895	5188	58200
5/8	0.625000	0.3067969	**35711**	159048	16213	**17856**	79524	8106	58200
3/4	0.750000	0.4417875	**51424**	229029	23347	**25712**	114515	11673	58200
7/8	0.875000	0.6013219	**69994**	311734	31777	**34997**	155867	15889	58200
1	1.000000	0.7854000	**91421**	407163	41505	**45710**	203582	20752	58200

** Double & Single Shear Load in Pounds are calculated on basis of single shear strength 58200 PSI (401 Mpa) which is 60% of tensile strength 97,000 PSI (670 Mpa)

* Single & Double Shear Load in Newtons & Kgf is calculated from Pound Load.

ANNEXUTRE-F (SHEAR STRENGTH OF DOWEL PIN)

UN-HARDENED & Ground Austenitic Stainless Steel (AISI 304 & 316) Dowel Pin METRIC SERIES as per Din 7(ISO2338)

Size mm	Area Sq mm	Double Shear Load			Single Shear Load			Considered Shear Strength as 60% of Tensile Strength
		Pounds*	Newtons**	Kgf*	Pounds	Newtons**	Kgf*	Mpa
1.5	1.767	319	**1421**	145	160	**710**	72	402
2.0	3.142	567	**2526**	257	284	**1263**	129	402
2.5	4.909	886	**3974**	402	443	**1973**	201	402
3.0	7.069	1276	**5683**	579	638	**2842**	290	402
4.0	12.566	2269	**10103**	1030	1134	**5052**	515	402
5.0	19.635	3545	**15787**	1609	1772	**7893**	805	402
6.0	28.274	5104	**22733**	2317	2552	**11366**	1159	402
8.0	50.266	9074	**40414**	4120	4537	**20207**	2060	402
10.0	78.540	14178	**63146**	6437	7089	**31573**	3218	402
12.0	113.098	20417	**90930**	9269	10208	**45465**	4635	402
14.0	153.938	27789	**123766**	12616	13895	**61883**	6308	402
16.0	201.062	36296	**161654**	16479	18148	**80827**	8239	402
20.0	314.160	56713	**252585**	25748	28356	**126292**	12874	402
25.0	490.875	88614	**394664**	40231	44307	**197332**	20115	402

** Double & Single Shear Load in Newtons are calculated on basis of single shear strength 402 Mpa is 60% of tensile strength 670 Mpa.

* Single & Double Shear Load in Pounds & Kgf is calculated from Newton Load.

Industrial Fasteners

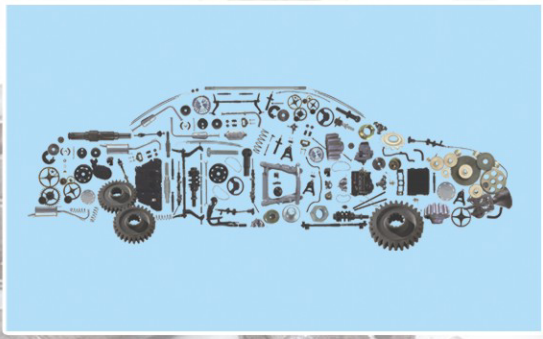

LPS

WE HELP CREATE

PRODUCT RANGE

PRODUCT	DESCRIPTION	STEEL	STAINLESS STEEL	NON FERROUS METAL (BRASS)
ANSI B. 18.3 (BS 2470)	**HEXAGON SOCKET SCREW KEY** 1/16" TO 3/4" SHORT & LONG SERIES	HRC 45 MIN	-	-
ANSI B. 18.3 (BS 2470)	**HEXAGON SOCKET HEAD CAP SCREW** # 8 TO 1-1/2" DIA 1/4 TO 14" LENGTH ALLOY STEEL - ASTM A574 STAINLESS STEEL - ASTM F837	39 TO 45 HRC	AISI 304 AISI 316	-
ANSI B. 18.3 (BS 2470)	**HEXAGON SOCKET SET SCREWS WITH FLAT POINT** # 8" TO 1" 3/16" TO 4" ALLOY STEEL - ASTM F 912 STAINLESS STEEL - ASTM F880	45 TO 53 HRC	AISI 304 AISI 316	-
ANSI B. 18.3 (BS 2470)	**HEXAGON SOCKET SET SCREWS WITH CONE POINT** # 8 TO 1" 3/16" TO 4" ALLOY STEEL - ASTM F 912 STAINLESS STEEL - ASTM F880	45 TO 53 HRC	AISI 304 AISI 316	-

NOTE : NON FERROUS (BRASS) WILL BE SUPPLY AGAINST DEMAND.
SIZES & FINISH TYPE ALSO AVAILABLE ON DEMAND.

PRODUCT RANGE

PRODUCT	DESCRIPTION	STEEL	STAINLESS STEEL	NON FERROUS METAL (BRASS)
ANSI B. 18.3 (BS 2470)	**HEXAGON SOCKET SET SCREWS WITH DOG POINT** # 8 TO 1” 3/16” TO 4” ALLOY STEEL - ASTM F 912 STAINLESS STEEL - ASTM F880	45 TO 53 HRC	AISI 304 AISI 316	-
ANSI B. 18.3 (BS 2470)	**HEXAGON SOCKET SET SCREWS WITH CUP POINT** # 8” TO 1” 3/16” TO 4” ALLOY STEEL - ASTM F 912 STAINLESS STEEL - ASTM F880	45 TO 53 HRC	AISI 304 AISI 316	-
ANSI B. 18.3 (BS 2470) 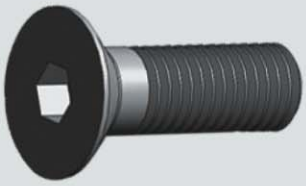	**HEXAGON SOCKET COUNTER SUNK HEAD SCREWS** # 10 TO 1-1/2” DIA 1/4” TO 14” LENGTH ALLOY STEEL - ASTM F 835 STAINLESS STEEL - ASTM F879	38 TO 44 HRC	AISI 304 AISI 316	-
ANSI B. 18.3 (BS 2470)	**HEXAGON SOCKET BUTTON HEAD SCREWS** # 10 TO 5/8” DIA 1/4” TO 4” LENGTH ALLOY STEEL - ASTM F 835 STAINLESS STEEL - ASTM F879	38 TO 44 HRC	AISI 304 AISI 316	-

NOTE : NON FERROUS (BRASS) WILL BE SUPPLY AGAINST DEMAND.
SIZES & FINISH TYPE ALSO AVAILABLE ON DEMAND.

PRODUCT RANGE

PRODUCT	DESCRIPTION	STEEL	STAINLESS STEEL	NON FERROUS METAL (BRASS)
ANSI B. 18.2.1 **(BS 1083 & BS 1768)** 	**HEX CAP SCREWS** # 10 (3/16") TO 1-1/2" DIA 1/4" TO 17" LENGTH ALLOY STEEL - SAE J429 ASTM A354 STAINLESS STEEL - ASTM F593	GR 5 GR 8 R S T V BD BC	AISI 304 AISI 316	-
ANSI B. 18.6.2 	**SQUARE HEAD SET SCREWS** 1/4" TO 1" DIA 1/4" TO 4" LENGTH	-	AISI 304 AISI 316	-
ANSI B. 18.2.2 	**HEXAGON CASTLE NUTS** 1/4" TO 1"	-	AISI 304 AISI 316	-
ANSI B. 18.5 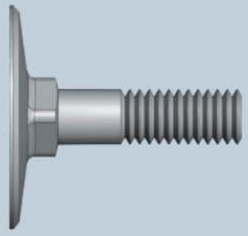	**FLAT COUNTER SUNK HEAD ELEVATOR BOLTS** 1/4" TO 3/8" DIA 3/4" TO 5" LENGTH	-	AISI 304	-

NOTE : NON FERROUS (BRASS) WILL BE SUPPLY AGAINST DEMAND.
SIZES & FINISH TYPE ALSO AVAILABLE ON DEMAND.

PRODUCT RANGE

PRODUCT	DESCRIPTION	STEEL	STAINLESS STEEL	NON FERROUS METAL (BRASS)
LPS NORM	**SHAFT COLLARS** DIA (d) 1/4" TO 4"	✓	AISI 304 AISI 316	-
LPS NORM	**PENTAGON HEAD SCREWS** DIA 3/8" TO 1/2" 3/4" TO 5" LENGTH	-	AISI 304	-
DIN 84 (ISO 1207)	**SLOTTED CHEESE HEAD SCREWS** M1 - M10 2 TO 80 LENGTH	4.4 8.8	A2 A4	-
DIN-125 (ISO 7089)	**FLAT WASHERS** M4 TO M48	140 HV 200 HV 300 HV	A2 A4 (140HV-200HV)	-

NOTE : NON FERROUS (BRASS) WILL BE SUPPLY AGAINST DEMAND.
SIZES & FINISH TYPE ALSO AVAILABLE ON DEMAND.

PRODUCT RANGE

PRODUCT	DESCRIPTION	STEEL	STAINLESS STEEL	NON FERROUS METAL (BRASS)
DIN-127B	**SPRING LOCK WASHER WITH SQUARE END** M4 to M36	STEEL	A2 A4	-
DIN 444 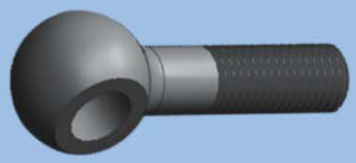	**EYE BOLTS (TYPE B)** M5X25 TO M30X300 (Type A & C as per requirement)	5.8	A2 A4	✓
DIN 464-1986 **DIN 466-1956**	**KNURLED THUMB SCREWS** M3X4 TO M10X60	5.8	A2 A4	✓
DIN 466-1986 **DIN 466-1956**	**KNURLED NUTS WITH COLLAR** M3 TO M10	5.8	A2 A4	✓

NOTE : NON FERROUS (BRASS) WILL BE SUPPLY AGAINST DEMAND.
SIZES & FINISH TYPE ALSO AVAILABLE ON DEMAND.

PRODUCT RANGE

PRODUCT	DESCRIPTION	STEEL	STAINLESS STEEL	NON FERROUS METAL (BRASS)
DIN 467	**KNURLED NUTS** M3 TO M10	5.8	A2 A4	✓
DIN 478	**SQUARE HEAD BOLT WITH COLLAR** M5X8 TO M24X200	8.8 10.9	A2	-
DIN 479	**SQUARE HEAD BOLT WITH HALF DOG POINT** M5X8 TO M24X200	8.8 10.9	A2	-
DIN 480	**SQUARE HEAD BOLT WITH COLLAR AND OVAL HALF DOG POINT** M5X16 TO M24X150	8.8 10.9 12.9	A2 A4	-

NOTE : NON FERROUS (BRASS) WILL BE SUPPLY AGAINST DEMAND.
SIZES & FINISH TYPE ALSO AVAILABLE ON DEMAND.

PRODUCT RANGE

PRODUCT	DESCRIPTION	STEEL	STAINLESS STEEL	NON FERROUS METAL (BRASS)
DIN 546	**SLOTTED ROUND NUTS** M4 TO M16	5.8	A2	-
DIN 561	**HEXAGON SET SCREW WITH SMALL HEXAGON AND FULL DOG POINT** M6X10- TO M36X250	22H 33H (8.8) (10.9)	A2	-
DIN 564 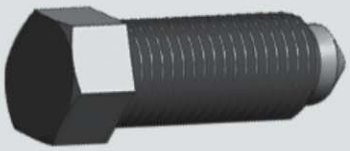	**HEXAGON SET SCREW WITH SMALL HEXAGON AND CONED HALF DOG POINT** M6X10 TO M36X250	22H 33H (8.8) (10.9)	A2	-
DIN 609 **DIN 610**	**HEXAGON FIT BOLTS WITH LONG THREADED DOG POINT** M8X30 TO M30X300	8.8 10.9 12.9	A2	-

NOTE : NON FERROUS (BRASS) WILL BE SUPPLY AGAINST DEMAND.
SIZES & FINISH TYPE ALSO AVAILABLE ON DEMAND.

PRODUCT RANGE

PRODUCT	DESCRIPTION	STEEL	STAINLESS STEEL	NON FERROUS METAL (BRASS)
DIN 653	**KNURLED THIN THUMB SCREWS** M4X6 TO M10X50	5.8	A2 A4	-
DIN 705	**SHAFT COLLARS** DIA (d) 6MM TO 120MM	✓	A2 A4	-
DIN 835/938/939	**STUD** M6 TO M24 20 TO 200 LENGTH	8.8 10.9	A2 A4	-
DIN 911 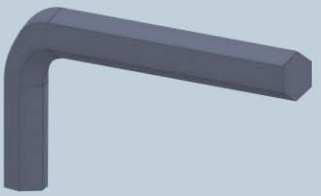	**HEXAGON SOCKET SCREWS KEY** 1.5 TO 19.0mm (SHORT & LONG SERIES)	HRC 45 MIN.	-	-

NOTE : NON FERROUS (BRASS) WILL BE SUPPLY AGAINST DEMAND.
SIZES & FINISH TYPE ALSO AVAILABLE ON DEMAND.

PRODUCT RANGE

PRODUCT	DESCRIPTION	STEEL	STAINLESS STEEL	NON FERROUS METAL (BRASS)
DIN 912 (ISO 4762)	**HEXAGON SOCKET HEAD CAP SCREWS** M3X5 TO M42X300	8.8 12.9	A2 A4	-
DIN 913 (ISO 4026)	**HEXAGON SOCKET SET SCREWS WITH FLAT POINT** M3X4 TO M16X60	33H 45H	A2	-
DIN 914 (ISO 4027)	**HEXAGON SOCKET SET SCREWS WITH CONE POINT** M3X6 TO M16X60	33H 45H	A2	-
DIN 915 (ISO 4028)	**HEXAGON SOCKET SET SCREWS WITH DOG POINT** M3X6 TO M16X60	33H 45H	A2	-

NOTE : NON FERROUS (BRASS) WILL BE SUPPLY AGAINST DEMAND.
SIZES & FINISH TYPE ALSO AVAILABLE ON DEMAND.

PRODUCT RANGE

PRODUCT	DESCRIPTION	STEEL	STAINLESS STEEL	NON FERROUS METAL (BRASS)
DIN 916 (ISO 4028)	**HEXAGON SOCKET SET SCREWS WITH CUP POINT** M3X4 TO M16X60	33H 45H	A2	-
DIN 921	**SLOTTED PAN HEAD SCREWS WITH LARGE HEAD** M3X4 TO M10X25	5.8	A2	-
DIN 923	**SLOTTED PEN HEAD SCREWS WITH SHOULDER** M3X3 TO M10X25	5.8	A2	-
DIN 931 (ISO 4014) **DIN 960 (ISO 8676)**	**HEXAGON HEAD BOLTS** M3X20 TO M42X300	8.8 10.9 12.9	A2 A4	✓

NOTE : NON FERROUS (BRASS) WILL BE SUPPLY AGAINST DEMAND.
SIZES & FINISH TYPE ALSO AVAILABLE ON DEMAND.

PRODUCT RANGE

PRODUCT	DESCRIPTION	STEEL	STAINLESS STEEL	NON FERROUS METAL (BRASS)
DIN 933 (ISO 4017) **DIN 961 (ISO 8676)** 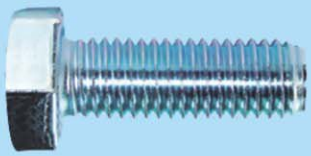	**HEXAGON HEAD SCREWS** M3X6 TO M42X200	8.8 10.9 12.9	A2 A4	-
DIN 934 (ISO 4032) 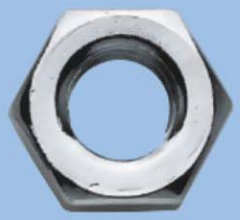	**HEXAGON NUTS** M6 TO M12	6 8 10	A2	✓
DIN 935 & DIN 937 	**HEXAGON CASTLE NUTS** M6 TO M30	-	A2 A4	✓
DIN-963 (ISO 2009) 	**SLOTTED COUNTERSUNK HEAD SCREWS** M1 TO M4 3 TO 25 LENGTH	4.8	A2 A4	-

NOTE : NON FERROUS (BRASS) WILL BE SUPPLY AGAINST DEMAND.
SIZES & FINISH TYPE ALSO AVAILABLE ON DEMAND.

PRODUCT RANGE

PRODUCT	DESCRIPTION	STEEL	STAINLESS STEEL	NON FERROUS METAL (BRASS)
DIN-965A (ISO 7046)	**CROSS RECESSED COUNTERSUNK FLAT HEAD SCREWS** M1.6 TO M10 4 TO 45 LENGTH	4.8 8.8	A2 A4	-
DIN 982 (ISO 7040)	**PREVAIL TORQUE TYPE HEX LOCK NUTS** M5 TO M24	8 10	A2 A4	-
DIN-1481 (ISO 8752)	**SLOTTED SPRING PINS** M1 to M10	(420-560HV)	A2	-
DIN 6330 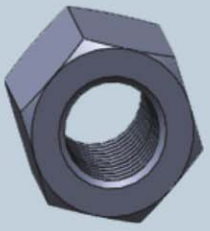	**HEXAGON NUTS WITH HEIGHT OF 1.5 d** M8 TO M24	-	A2 A4	-

NOTE : NON FERROUS (BRASS) WILL BE SUPPLY AGAINST DEMAND.
SIZES & FINISH TYPE ALSO AVAILABLE ON DEMAND.

PRODUCT RANGE

PRODUCT	DESCRIPTION	STEEL	STAINLESS STEEL	NON FERROUS METAL (BRASS)
DIN 6331 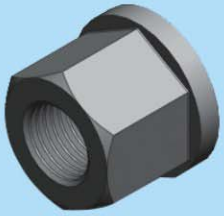	**HEXAGON NUT WITH COLLAR** M8 TO M24	-	A2 A4	-
DIN 6921	**HEXAGON FLANGE BOLT** M5 TO M20 10 TO 150 LENGTH	8.8 10.9 12.9	-	-
DIN 6914	**HIGH STRENGTH HEXAGON HEAD BOLTS** M12 TO M48 30 TO 550 LENGTH	8.8 10.9	-	-
DIN-7985A (ISO 7045)	**CROSS RECESSED RAISED CHEESE HEAD SCREW** M1.5 TO M10 4 TO 45 LENGTH	STEEL 4.8	-	-

NOTE : NON FERROUS (BRASS) WILL BE SUPPLY AGAINST DEMAND.
SIZES & FINISH TYPE ALSO AVAILABLE ON DEMAND.

PRODUCT RANGE

PRODUCT	DESCRIPTION	STEEL	STAINLESS STEEL	NON FERROUS METAL (BRASS)
DIN 7981 (ISO 7049)	**CROSS RECESSED PAN HEAD TAPPING SCREWS** ST 2.2 To ST 6.3 4.5 - 38 LENGTH	STEEL	A2 A4	-
DIN 7991 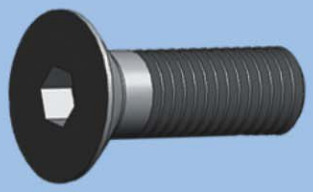	**HEXAGON SOCKET COUNTER-SUNK HEAD SCREWS** M3X6 TO M24X220	8.8 10.9 12.9	A2	-
ISO 2341	**CLEVIS PIN WITH HEAD** ø 3 TO ø 55 8.0 TO 150 LENGTH	STEEL	-	-
ISO 7380	**HEXAGON SOCKET BUTTON HEAD SCREWS** M3X6 TO M16X80	8.8 10.9 12.9	-	-

NOTE : NON FERROUS (BRASS) WILL BE SUPPLY AGAINST DEMAND.
SIZES & FINISH TYPE ALSO AVAILABLE ON DEMAND.

WIND TURBINE PRODUCTS

PRODUCT	DESCRIPTION	STEEL	STAINLESS STEEL	NON FERROUS METAL (BRASS)
	ANCHOR BUSH M50-M300 5 TO 150 LENGTH	STEEL	-	-
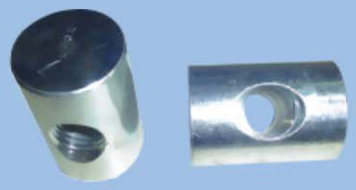	**CROSS BOLT** 50MM TO 140MM	STEEL	-	-
	WEDGES Dia. 25-35 32.5 To 52.5 MM LENGTH	STEEL	-	-
	HIGH STRENGTH HEX BOLT WITH DELTATONE FINISH M6 To M48 20MM TO 450MM LENGTH	STEEL	-	-

NOTE : NON FERROUS (BRASS) WILL BE SUPPLY AGAINST DEMAND.
SIZES & FINISH TYPE ALSO AVAILABLE ON DEMAND.

WIND TURBINE PRODUCTS

PRODUCT	DESCRIPTION	STEEL	STAINLESS STEEL	NON FERROUS METAL (BRASS)
DIN 6914	**HOT DIP GALVANIZED HIGH STRENGTH HEX BOLT** M10 TO M48 20MM TO 450MM LENGTH	STEEL	-	-
DIN 975/DIN 976 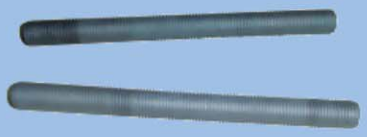	**THREADED ROD** M6 TO M42 15MM TO 1200MM LENGTH	STEEL	-	-
	SPECIAL REDUCED SHANK STUD M10 TO M48 40MM TO1600MM LENGTH	STEEL	-	-
	REDUCED SHANK STUD WITH HEX DRIVE M6 TO M30 13MM - 260MM LENGTH	STEEL	-	-

NOTE : NON FERROUS (BRASS) WILL BE SUPPLY AGAINST DEMAND.
SIZES & FINISH TYPE ALSO AVAILABLE ON DEMAND.

AUTOMOTIVE PARTS

PRODUCT	DESCRIPTION	STEEL	STAINLESS STEEL	NON FERROUS METAL (BRASS)
	WHEEL BOLTS M10 TO M20 25MM TO 70MM LENGTH MATERIAL 10.9 (ISO 898-1) SPECIALITY : STRAIGHT KNURLING UNDER HEAD WITH PITCH 0.5~2.0	STEEL	-	-
	HEX HEAD BANJO BOLT M6 TO M24 16MM TO 140MM LENGTH	STEEL	-	-
	CYLINDRICAL HEAD STUD M6-M36, 1/4"- 1" 30 To 1600 MM, 1"- 60" LENGTH	STEEL	✓	-
	OIL PAN SCREWS M8 - M20 24MM - 120MM LENGTH	STEEL	-	-

NOTE : NON FERROUS (BRASS) WILL BE SUPPLY AGAINST DEMAND.
SIZES & FINISH TYPE ALSO AVAILABLE ON DEMAND.

AUTOMOTIVE PARTS

PRODUCT	DESCRIPTION	STEEL	STAINLESS STEEL	NON FERROUS METAL (BRASS)
	DRIVE SHAFT M8 - M20 24MM - 230MM LENGTH	STEEL	-	-
	ALTERNATER SHAFT M14- M20 30MM - 140MM LENGTH	STEEL	-	-
	ENGINE ASSEMBLY 3/8" -3/4" INCH 1" - 8 " INCH LENGTH SPECIALITY : FATIGUE RESISTANT	STEEL	-	-
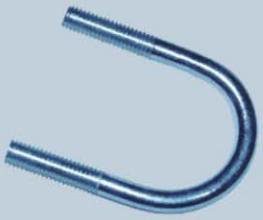	**U-BOLT** M 6 - M24 20MM - 300MM LENGTH	STEEL	-	-

NOTE : NON FERROUS (BRASS) WILL BE SUPPLY AGAINST DEMAND.
SIZES & FINISH TYPE ALSO AVAILABLE ON DEMAND.

Finishes

- Zinc Plating in White, Blue, Yellow, Green & Black (ISO 4042).
- Dacromet Coating, Geomet Coating, Zinc Flake Coating (ISO 10683).
- Zinc Iron & Zinc Manganese Plating.
- Trivalent or Hexa Chrome Free Plating (ROHS).
- Cadmium Plating.
- Hot Dip Galvanizing.

SST CHART FOR PLATING/COATING

(Standard Coating Thickness)

Base Coating	Process	Passivation	ISO Designation	Standard Corrosion Resistance		With Special Lacquer Top Coating	
				White Rust (No. of Hrs.)	Red Rust (No. of Hrs.)	White Rust (No. of Hrs.)	Red Rust (No. of Hrs.)
Zinc	Acid	White(Cr6)	A2B	36	48	60	72
		White(Cr3)		36	48	60	72
		Yellow (Cr6)	A2C	72	148	96	172
		Yellow (Cr3)		48	96	72	120
		Green (Cr6)	A2D	96	180	120	204
		Black (Cr6)	A2R	72	180	96	204
		Black (Cr3)		72	180	96	204
	Alkaline	Yellow (Cr6)	A2C	96	180	120	204
		Yellow (Cr3)		96	180	120	204
		Black (Cr6)	A2R	72	180	96	204
		Black (Cr3)		72	180	96	204
Zinc - Iron	---	Black	---	200	350	---	---
Zinc - Phosphating	---	---	---	---	48	---	---
Mn - Phosphating	---	---	---	---	72	---	---
Zinc - Nickel		Transperant	---	240	720	---	---
	---	Black	---	240	720	---	---
Zinc - Cobalt (JCF)		---	---	250	500	---	---
Geomet (With Top Coating)	---	---	---	---	480 - 1000	---	---
Dacromet (With to Top Coating)	---	---	---	---	480	---	---
Dorken (With in Top Coating)	---	---	---	---	480 - 960	---	---

Raw Material

Materials & Grades

- **Low Carbon Steel :** Unhardened Pins, ISO 898 (5.8 & 14H)
- **Alloy Steel :** ISO 898 (8.8,10.9,12.9, 22 H, 33 H,45 H)
  ASTM A354 (BC & BD), A 574, F835, F 912
- **High Grade Alloy Steel :** Hardened Pins, ASTM A193 (B7 & B16)
- **Stainless Steel :** ISO 3506 (A2, A4), ASTM F837 (CW) , ASTM F879 (CW),
  ASTM F880 (CW), ASTM A193 (B8 & B8M)
- **Special Purpose Stainless Steel :** A-286 , 15-5 PH, 17-4 PH, AISI 431, AISI 416
- **Brass**
- **Inconel**
- **Titanium**
- **Nimonic-80A & 90**

CHEMICAL COMPOSITION* OF ALLOY STEEL USED FOR FASTENERS

AISI/ SAE NO.	C (Carbon)	Mn (Mangnese)	P (Phosphorus)	S (Sulphur)	Si (Silicon)	Ni (Nickel)	Cr (Chromium)	Mo (Molybdenum)	V (Vanadiun)	B (Boron)
	% (Min-Max)	% (Min-Max)	Max.	Max.	% (Min-Max)	% (Min-Max)	% (Min-Max)	% (Min-Max)	% (Min-Max)	% (Min-Max)
1010	0.08-0.13	0.30-0.60	0.04	0.05	0.10 MAX	--	--	--	--	--
1015	0.13-0.18	0.30-0.60	0.04	0.05	0.10 MAX	--	--	--	--	--
1020	0.18-0.23	0.30-0.60	0.04	0.05	0.10-0.20	--	--	--	--	--
1541	0.36-0.44	1.35-1.65	0.04	0.05	0.15-0.35	--	--	--	--	--
10B21	0.18-0.23	0.60-0.90	0.04	0.05	0.10-0.20	--	--	--	--	0.0005-0.003
10B22	0.17-0.23	1.00-1.30	0.04	0.05	0.15-0.35	--	--	--	--	0.0005-1.003
15B25	0.23-0.29	0.80-1.10	0.04	0.05	0.10-0.20	--	--	--	--	0.0005-0.003
15B41	0.36-0.44	1.35-1.65	0.04	0.05	0.10-0.20	--	--	--	--	0.0005-0.003
4135	0.33-0.38	0.70-0.90	0.035	0.04	0.15-0.35	--	0.80/1.10	0.15-0.25	--	--
4140	0.38-0.43	0.75-1.00	0.035	0.04	0.15-0.35	--	0.80/1.10	0.15-0.25	--	--
52100	0.98-1.10	0.25-0.45	0.025	0.025	0.15-0.35	--	1.30/1.60	--	--	--
SUJ2L	0.95-1.10	0.50 MAX	0.030	0.040	0.15-0.35	--	1.30-1.60	0.080	--	Pb0.10/0.30
6150	0.48-0.53	0.70-0.90	0.035	0.04	0.15-0.35	--	0.80/1.10	--	0.15 min.	--
8640	0.38-0.43	0.75-1.00	0.035	0.04	0.15-0.35	0.40-0.70	0.40/0.60	0.15-0.25	--	--
51B37	0.35-0.40	0.35-0.45	0.015	0.025	0.15-0.30	--	0.95/1.15	--	--	0.002-0.003

CHEMICAL COMPOSITION* OF STAINLESS STEEL USED FOR FASTENERS

AISI/ SAE NO.	C (Carbon)	Mn (Mangnese)	P (Phosphorus)	S (Sulphur)	Si (Silicon)	Ni (Nickel)	Cr (Chromium)	Mo (Molybdenum)	V (Vanadiun)	B (Boron)
	% (Min-Max)	% (Min-Max)	Max.	Max.	% (Min-Max)	% (Min-Max)	% (Min-Max)	% (Min-Max)	% (Min-Max)	% (Min-Max)
302	0.15 max	2.00 max	0.045	0.030000	1.00 max	8.0-10.0	17.0-19.0	--	--	--
303	0.15 max.	2.00 max.	0.2	0.15 min.	1.00 max.	8.0-10.0	17.0-19.0	0.6 max.	--	--
304	0.08 max.	2.00 max.	0.045	0.03	1.00 max.	8.0-10.5	18.0-20.0	--	--	--
304L	0.03 max.	2.00 max.	0.045	0.03	1.00 max.	8.0-12.0	18.0-20.0	--	--	--
316	0.08 max.	2.00 max.	0.045	0.03	1.00 max.	10.0-14.0	16.0-18.0	2.00-3.00	--	--
316L	0.03 max.	2.00 max.	0.045	0.03	1.00 max	10.0-14.0	16.0-18.0	2.00-3.00	--	--

***Reference taken from SAE J402, SAE J403, SAE J404, SAE J405 & SAE J1249**

Machining Capabilities

- Parting
- Straightening
- Facing & Centering
- CNC Turning
- Milling
- Drilling
- Tapping
- Heat Treatment Operations – Normalizing, Case Carburising, Hardening, Annealing,Tempering
- Shot Blasting
- Centre Lapping
- Cylindrical Grinding
- Centre less Grinding
- Magnetic Crack Detection
- Buffing
- Ultra Sonic Cleaning
- Phosphating -Zn & Mg
- Eddy Current Sorting
- Floroscent Partide Identification

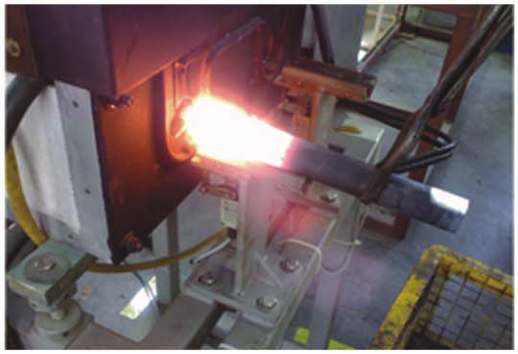

FASTENER TERMINOLOGY

Alloy Steel - A mixture (or alloy) of ordinary steel added to other metals besides carbon with the specific purpose of attaining certain characteristics such as higher strength. A few exceptions to this definition exist, however, so that a chromium content above 4% is not considered alloy steel and above 12% is considered stainless steel.

Aluminum - The most abundant metal in the earth, aluminum is blueish and silvery-white, very light, malleable, and ductile with high heat and electrical conductivity. It is non-magnetic and one-third the weight of steel with good corrosion resistance against certain chemicals and acid and but weak resistance against other elements such as sea water.

AISI - Stands for American Iron and Steel Institute.

AN - Stands for Air Force-Navy.

ANSI - Stands for American National Standards Institute.

ANSI/ASME Nomenclature (B1.1 AND ALL) - The "B" numbers are standards set by ASME regarding various aspects of fasteners. The most common number, B1.1, deals with dimensions and thread tolerances;B1.2 with gages and their use;B1.3 with various systems for gaging thread;B1.7 with definitions of terms.

ASME - Stands for American Society of Mechanical Engineers.

ASTM - Stands for American Society for Testing and Materials.

ASTM 193-194 - ASTM 193 are chemical and physical specifications for hex head cap screw, studs, and bolts made of steel and stainless steel. ASTM 194 refers to nuts. The commonly used stainless is called grade 8, referring to 304 material to certain specifications, and grade 8M referring to 316 material. The major differences between ASTM and commercial stainless fasteners are: (a) 304 material must be used for manufacturing grade 8, not simply 18-8; (b) ASTM 193-194 generally refers to heavy hex heads and heavy nuts, through semi-finished hex head and finished nuts may be supplied with the permission of the buyer; (c) cold formed material will require carbide solution treatment or annealing to reduce hardness to meet ASTM requirements.

Age Harden - To use modified heat treatments at various temperatures over a period of time to harden and strengthen a fastener.

Alkaline - A substance that has a pH value greater than 7. A base, acts as on electrolyte in the presence of metal.

Allowance - The intentional space manufactured into mating threads. The intentional or prescribed difference between the thread design size and the thread basic size.

Angle Controlled Tightening - Method of tightening where the person installing the fastener removes the slack from the assembly, and then tightens the fastener a prescribed amount (eg. 120^0) based on the length of the fastener. This method is often coupled with the used of torque for the initial "snug" tightening.

Anneal - To heat metal in order to lower its hardness. The term anneal refers to the heat treatment given all 300 series stainless and most 400 series stainless by a steel mill after the raw material has been completed but before fasteners are manufactured. Anneal also refers to the heat treatment given 400 series stainless fasteners after their manufacture (also called hardening and tempering) to lower hardness and increase toughness. For example, fasteners of 410 stainless may score over 200,000 psi after manufacture and be too brittle. By annealing at 1000 degrees F. tensile strength would decrease to 125,000-15,000 psi; annealing the same material to 500 degrees F. would bring tensile to 16,000-19,000 psi.

Anode - The material in a corrosive attack that becomes corroded.

Austenite - A metallic solution of steel that is non-magnetic; has a face-centered cubic structure. In carbon steels, this temperature range allows for higher absorption of carbon into the metal.

Austenitic - Refers to 300 series stainless, the most popular of the stainless alloys accounting for 85%-90% of stainless fasteners sold. Named for Sir Robert Williams Austen, an English metallurgist, austenitic stainless is a crystal structure formed by heating steel, chromium, and nickel to a high temperature where it forms the characteristics of 300 series stainless steel. An "AUSTENITE" is a molecular structure where 8 atoms of iron surround one atom of carbon, thus limiting the corrosive effects of the carbon. Austenitic fasteners have the highest level of corrosion resistance in the stainless family, cannot be hardened by heat treatment, and are almost always non-magnetic. Sometimes heat and friction in cold-forming can cause austenitic stainless to take on slight magnetism, but the corrosion-resistant properties remain the same.

The most popular of austenitic grades is known generically as "18-8 stainless" and includes grades 302, 302HQ, 303, 304, 305, and XM-7. Typical industries using 18-8 fasteners include : food, Dairy, Wine, Chemical, Pulp & Paper, Pharmaceutical, boating, swimming pool, pollution control, electronic, medical and hospital equipment, computer, textile.

Type 316 stainless has added nicked and especially molybdenum, the molybdenum (called moly) sharply increases corrosion resistance to chlorides and sulfates, including sulfurous acids in the pulp industry. It has superior tensile strength at high temperature compared to 18-8.

Besides pulp and paper, typical industries using 316 are: photographic and other chemicals, ink, textile, bleach, rubber.

Exotic metal in the 300 series include 309, 310, 317, 321, and 347. With superior corrosion resistance at elevated temperatures, these metals are used for furnace parts, high temperature containers and processing equipment, aircrafts part such as collector rings, exhaust systems, and equipment for very corrosive compounds of sulfuric, nitric, citric, and lactic acids. Their usage compared to 18-8 and 316 is very low.

Austenizing - The process of uniformly heating a metal until the metal grain structure transforms from Ferrite to Austenite. For carbon steels, transformation begins at 13330F and becomes completely uniform throughout the metal at a higher temperature (varies by carbon content).

Bearing Surface - The part of a fasteners such as the washer face of a nut or under the head of a machine screw that actually comes in contact with the part it fastens or we can say, surface that supports a fastener, or what a fastener is driven into.

Bending - A force load that occurs when a shear load is applied against a raised surface that sits between the anchor and the base material.

Bending Force - A combination of tension and shear forces applied to a fastener.

Brass - The most common alloy of copper, brass is about two-thirds copper, one-third zinc. It is non-magnetic with good strength and toughness, high electrical conductivity, and an attractive lustrous finish. It has good corrosion resistance but not in salt water. Brass is commonly used by the electrical and communications industries, builders hardware, and some marine applications.

Brinell - A hardness scale which measures the indentation resistance of a metal. Brinell testing is performed by dropping a steel ball on a material and measuring the dimensions of the indentation left by the ball.

Brinell Hardness Scale - Measures the indentation hardness of material through the scale of penetration an indenter, loaded on a material test-piece. Brinelling refers to surface fatigue caused by repeated impact or overloading. It is a common cause of roller bearing failure and loss of preload in bolted joints when a hardened washer is not used. Engineers will use the Brinell hardness of materials in their calculations to avoid this mode of failure. Fretting corrosion can cause a similar-looking kind of damage and is called false brinelling since the mechanism is different.

Broach- Using sharp edges to cut material and push it away, broach usually refers to the socket drive on socket screws.

Cadmium - Plating metal that possesses superior corrosion resistance (compared to zinc) and lubricity which helps during installation. Highly toxic; restricted under RoHS.

Captive Screw- Where the shoulder of a screw is perceptibly smaller in diameter than the threaded portion (technically the minor diameter or less).

Carbon- Adds strength to stainless steel, but also lowers corrosion resistance. The more carbon there is, the more chromium must be added, because carbon offsets 17 times its own weight in chromium to form carbides, thus reducing the chromium available for resisting corrosion.

Case Hardening - A process that involves putting carbon (or a combination of carbon and nitrogen) into the surface of steel to make it a higher-carbon steel which can be hardened by heat treatment.

Cathode - The material in a corrosive attack that attracts electrons from the anode.

Cathodic Barrier Protection - Method of fighting corrosion in which a plating metal it attached to the surface of a substrate material (eg: fastener). The plating metal is anodic to the substrate (thereby making the substrate cathodic) so that the plating metal will corrode first, thus protecting the substrate material.

Certificate of Compliance - A certification that a fastener meets the description or standard to which it was sold.

Chromium - A blue-white metal, chromium is the most important element providing corrosion resistance in stainless steel. By adding 12% chromium to ordinary steel, stainless steel is formed. Chromium offsets the corrosive effects of carbon found in steel and is the primary factor in the ability of stainless to form a passive film on its surface providing corrosion resistance.

Class IA/1B Threads - These threads have a loose tolerance fit . "A" threads are external while "B" threads are internal.

Class 2A/2B Threads - These threads have a good thread tolerance that balances manufacturing costs with performance.

Class 3A/3B Threads - These threads are made to an extremely close tolerance.

Clearance Fit - An internal and external thread design whose combination of allowances and tolerances allow for a free running assembly.

Coarse Thread - A wider thread usually having a higher stripping strength, faster assembly, and better fatigue resistance.

Cold Forming or Cold Heading or Cold Working - When fasteners are produced without heating or small heat below

the recrystallization temperature (so the raw material bond of stainless remains unchanged) by pressing metal wire against various dies at high speed to from a fastener's head or basic shape. Cold working causes an increase in tensile strength and hardness (know as work hardening) and a decrease in ductility.

Copper - A reddish metal that is an excellent conductor of heat and electricity. It is malleable, ductile, and non-magnetic with low to average strength and good corrosion resistance. Brass and silicon bronze composed mainly of copper, gain their strength from the addition of other metals, such as silicon.

Corrosion - The wearing away or alteration of a metal by an electrochemical reaction or by a direct chemical attack.

Corrosion, Galvanic - Corrosion involving two dissimilar metals in the presence of an electrolyte. The more active (anodic) of the two metals, sacrifices its ions to the less active, thereby causing breakdown in the active metal.

Corrosion, Pitting - (also called Cavitation Corrosion) Localized corrosion in which a small bubble of air gets trapped on the surface of the metal. This bubble deprives the metal's surface of fresh oxygen supply, causing that area to become anodic. The change in the reactivity of the metal causes the formation of small, sometimes deep, pits of rust.

Counterbore - The increase of the diameter of an opening for only part of the length. A hole though a 1 in.thick piece of material may have a one-inch sized diameter of half for the length with a 3/4 inch diameter for the balance of the hole, making it counterbored to a diameter of one inch to a depth of ½ inch.

Crest - The prominent part of a thread, whether internal or external.

Creep - The phenomenon that occurs when metals and other materials will continuously elongate when under high temperatures and a constant load.

Creep Strength - A measure of the resistance of fasteners to stress under elevated temperatures. At higher temperatures, a fastener can change in dimension under the same load, and that is called creep. Creep can cause the loosening of fasteners as temperature increases.

Cut Thread - A thread produced by removing material from the surface with a form-cutting tool.

Deburr - To remove chips, burrs, or other imperfections through a secondary operation such as grinding.

Descaling - The process of removing the flaky oxide film that forms on the surface of the fastener during production.

Dichromate - A chemical conversion coating commonly used on zinc electroplated fasteners. Helps prevent the corrosion of the zinc plating and may be dyed to add color to the fastener.

Double Lead Thread - A thread comprised of two different threads wrapped around the shank of a screw. This is advantageous on long screws or when quick-assembly is required.

Drive, Allen - is used in areas where secure holding of parts is required. The fasteners with the Allen type recess are usually hardened to offer the required performance.

Drive, Hexagon - The original of its type and is usually used on bolts or set screws. Sockets and open and closed wrenches are generally used to turn hexagonal headed fasteners.

Drive, Torx™ - offers the highest contact point area of all the fasteners mentioned here. Developed in 1972 it has a very high torque capability and is widely used in automated applications. Generically known as the Six-lobe, or T-socket Drive.

Ductility - The ability of a fastener to deform before breaking (for example, an elastic would be more ductile than a diamond). Ductility is a measurement similar to elongation.

Elastic Range - How far a fastener can be stretched and still return to its original form.

Elasticity - The properties of a metal to stretch and return to their original form.

Electrical Conductivity - Metals carry electric currents with varying capacities. As a relative guide to the conductivity of different metals, with electrolytic copper rated at 101 under the International Annealed Copper standard, at 68 degrees F.,18=8 stainless rates is rated at 5; silicon bronze 51 at 12; and brass at 27.

Electrolyte - An electrically conductive fluid or substance.

Electroplating - The deposition of a metallic Coating onto an object by putting a negative charge onto the object and immersing it into a solution which contains a salt of the metal to be deposited. The metallic ions of the salt carry a positive charge and are attracted to the part. When they reach it, the negatively charged part provides the electrons to reduce the positively charged ions to metallic form.

Elongation - Stretching a fastener to the point that it breaks. The percent of elongation at rupture (same as measure of ductility) is determined dividing the total length after stretching to the original length. Elongation increases as strength and hardness increase.

Extruding - When cold forming produces a fastener before threading with two different diameters. The portion with the large diameter is the shoulder; the smaller portion will be roll

threaded. In the extruding process, a manufacturer starts with raw material equal to the shoulder diameter and pushes part of it through a die, reducing the diameter of the portion which will later be roll threaded.

Fatigue - The failure of a fastener due to cyclic loads.

Fatigue Strength - Measures the endurance of a fastener by showing the load it can accept without breaking under repeated load cycles.

Ferrite - Iron that has not combined with carbon to form carbide. Also, iron and steel alloys that have a body-centered cubic structure.

Ferrous - Anything made of or containing iron, Also called ferric.

Fine Thread - Proponents of fine thread claim: (a) fine thread are stronger in tension because of their larger tensile stress area; (b) because of their larger minor diameters, fine thread develop higher torque and shear strengths; (c) fine thread tap better into thin walls and more easily into hard materials; (d) fine thread requires less torque to develop equivalent preloads, since they offer more resistance to vibration.

Flank Angle - The angle between the flank and a perpendicular line that intersects the root. Half the angle of a thread when the threads are symmetrical.

Flanks - The straight sides of the thread that connect the crest and the root.

Fracture Point - The point at which failure occurs and a fastener under stress breaks.

Frictional Coefficient - A ratio: friction between adjacent surfaces as they slide across one another over force pressing the two surfaces together. Friction Perpendicular Pressure, Influenced by lubrication.

Galling - When two metal or fasteners stick together and cannot be easily loosened. In tightening fasteners, for example, pressure builds on thread as metals rub against each other, and the passive film preventing corrosion on stainless may not form due to lack of oxygen. Heat contributes to galling caused by high speed fasteners installation. A reduced wrench speed can help. Thread lubrication is the most effective treatment for galling.

Gauge - The thickness or diameter of an object such as screws, sheet metal, or wire.

GO Gauge - An inspection tool used to check threaded part against allowed tolerances. One of two tolerance tests, the GO gauge is designed to measure the lower end tolerances of a part, and should be able to thread on.

Gimlet Point - A boring tip that has a spiral, pointed cutting edge. Found on wood screws and hex lag screws.

Grade - A rating in a scale classifying fasteners according to strength.

Grip Length - The portion under the head of a fastener to the beginning of the mating internal threads of another material or fastener component.

Hardness - Normally stated in term of Rockwell or Brinell scale of measurement, hardness shows resistance of a fastener to rough marks and abrasions, can indicate yield strength and brittleness, and has a direct relationship to tensile strength in alloy steel fasteners . However, for stainless, brass, and silicon bronze, the correlation between hardness and tensile or yield is tenuous with no definite relationship.

Case Hardening uses surface heat treatment on ferrous material to cause a harder outside surface than the centre. Through- hardening hardens the entire fastener. Bright hardening called for heat treatment without oxygen, so no oxides are formed on the material surface.

Hastelloy - Any one of a group of highly corrosion resistant high strength nickel based alloys produced and trademarked by Haynes International Inc.

Head, Flat - Has a countersunk flat head with a cone-shaped bearing surface of 82° (90° for metric), 100°, or 120°. Used in applications where the protrusion of the fastener above the mating surface is unacceptable.

Head, Flat Undercut - Similar to the Flat Head except that the head is undercut to 70% of its normal height used for short-length screws because it allows for greater thread length.

Head, Flanged - A type of fastener head combining a washer and a pan head into one unit. The resulting fastener head is lower in height and provides a greater bearing surface.

Head, Oval or Raised Countersunk Head is functionally the same as the flat countersunk variety and offers a deeper and therefore stronger recess that is neater in appearance.

Head, Hexagonal or Hex - Has a flat head, six flat sides and a flat bearing surface. May come indented and/or with a washer.

Head, Pan - Has a flat or rounded top surface cylindrical sides, and a flat bearing surface. Has a general-purpose bearing area and can be substituted in most applications for round, truss, or binding heads.

Heat Treating - Any heating or cooling process used to influence the mechanical properties of a metal. In fastener manufacture in typically refers to the process of austenizing, quenching, and tempering a product in order to form a martensitic grain structure (i.e. improve strength properties).

High Carbon Steel - Steels with a carbon range of 0.45% to 0.75% are classified as high-carbon. This form of steels has the best hardness and strength, and the least amount of ductility. The areas best suited for this steel are in tools, drills, saws, knife blades, and bearings. High carbon content reduces the wear and deformation of the steel.

High-Low Threads - Alternating threads of 30° and 60° included thread angles. Ideal for plastic, particleboard, masonite and wood. Comes with a sharp or blunt point.

Hot Dip Galvanizing - A process to coat fasteners that involves dipping the fastener to a prepared item bath of molten zinc.

Hot Forging - Heating metal to red-hot temperatures or temperatures above the recrystallization point to soften it before shaping a fastener. Hot forging is primarily used when the diameter of the metal is too large for cold forming or the quantity required is too small economically set up a cold forming machine.

Hydrogen Embrittlement - Hydrogen trapped under the surface of a fastener can later cause ruptures. It is generally associated with carbon and alloy steels, not stainless. There may be not external signs of corrosion before a break occurs.

Impact Load - A load applied to an anchor that is unanticipated, high-intensity burst of force that doesn't last long.

Inconel - Nickel-Chromium-Iron alloy (not to be confused with 18-8 Stainless Steel). Exotic material with excellent corrosion resistance.

K-Factor - In bolt tensioning refers to the friction and thread tolerance factors of an internal thread that can affect torque values. Also referred to as Nut Factor.

Length of Engagement - The actual surface area of engaged nut and bolt threads which contact each other.

Lot Sampling - Random samples taken from the same lot of fasteners for quality inspection. Maximum lot size for inspection purposes should not exceed 200,000 pieces; thus, lots over 200,000 would require additional samples.

Low Carbon Steel - A steel that contains less than 0.25% carbon and cannot be strengthened by heat-treating, strengthening may only be accomplished through cold working and case hardening. It is relatively soft and weak, but has outstanding ductility and toughness; in addition, it is machinable, weldable and is relatively inexpensive to produce.

Machineability - Same as free machining. Refers to the malleable characteristics of metal when cutting or forming on screw machines.

Magnetism - As related to stainless fasteners, 300 series stainless is non-magnetic in its raw material condition. Cold working can sometimes induce traces of magnetism in 300 series, depending on the severity of cold working and chemical composition of the stainless. A rise in magnetism is related to an increase in tensile strength and working hardening caused by the heat and friction of cold forming and does not reduce corrosion resistance or cause any molecular change in austentic raw material. A higher portion of nickel can increase stability in stainless, thus decreasing work hardening and any possibilities of magnetism. Brass and silicon bronze are non-magnetic. Many stainless specs including MS hex head cap screws allow 2.0 magnetic permeability which translates to low/medium magnetism. Magnetic permeability of 1.0 translates to a very slight, glancing magnetism.

Major Diameter - Largest or outside diameter of the threaded object that touches the crest of an external thread or the root of the internal thread.

Martensite - A micro structure of carbon steel formed by rapidly quenching a steel from austenizing temperatures. Notable for high hardness and increased strength capabilities compared to ferrite or austenite.

Medium Carbon Steel - Steels containing 0.30%-0.60% carbon; have sufficient carbon content to yield a consistent heat treatment response.

Minor Diameter - The inside or smallest diameter of the screw threads.

Molybdenum - Molybdenum (Moly) is a metal added to 316 stainless steel, sharply increasing its corrosion resistance to chlorides and sulfates, especially various sulfurous acids in the pulp industry. Molybdenum helps reduce hardness and increase tensile strength at higher temperatures. It is also added to Marutex® self-drilling screws made of 410 stainless steel to significantly increase corrosion resistance.

Monel - Nickel-Copper Alloy. Has excellent corrosion resistance in heat and salt water.

MPa - Megapascal.

Neck(ed) Down - A type of bolt failure characterized by a narrowing of a portion of the threaded area.

NO-GO Gauge - An Inspection tool used to check a threaded part against allowed tolerances. One of two tolerance tests, the NO-GO gauge is designed to measure the higher end tolerances of a part, and should not be able to thread on.

Nominal Diameter - The diameter used for general identification and sizing.

Nominal size - The designation used for the purpose of general identification.

Nonferrous - Anything that does not contain iron.

Normalizing - An annealing process that is used to remove strain and reduce coarse (eg.: martensitic) crystal structure.

Passivation - The spontaneous formation of a hard non-reactive surface film that inhibits further corrosion. This layer is usually an oxide or nitride that is a few atoms thick. Under normal conditions of pH and oxygen concentration, passivation is seen in such materials as aluminum, magnesium copper, stainless steel, titanium, and silicon.

Pearlite - A mixture of ferrite and cementite which form district layers or bands. Most steels are composed largely of ferrite with small pockets of cementite occurring sporadically throughout the steel.

Pitch diameter - The diameter that lies halfway between the major and minor diameters, or the root of an internal thread.

Pitting - Localized corrosion of a metal surface, confined to a point or small area that takes the form of cavities or pits.

Plain Finish - An oil, phosphate, or oxide finish placed over steel fasteners that gives it little to no long term corrosion resistance.

Plastic Range - The point at which steel under an elongating force will start to set and will no longer be able to return to its original dimensions.

Plating - The process of depositing an adherent metal onto the surface of a base metal.

Pre load - The clamping force that holds a joint together that must be overcome for the joint to separate.

Pretapping - A process that uses a multipoint cutting tool, called a tap, or produce uniform, internal, helical threads in a hole that will later be filled by a male fastener.

Proof Load - An applied tensile load that the fastener must support without permanent deformation and represents the usable strength of a certain standard of fasteners.

Proof Strength - The ideal amount of stretch that can be applied to a bolt in order for it to properly clam in a joint (i.e. must be functioning in the elastic range prior to yield).

Proof Stress - For internally threaded fasteners, the minimum ultimate tensile strength for the threads.

PSI - Pounds per square inch, a measurement often used as a common standard in comparing the strength of metals and applied pressures.

Quenching - The process of rapidly cooling a metal that has been heated into the austenitic range.

Rockwell - A hardness scale which measure indentation hardness of metals. The hardness testing machine applies a major and a minor load to the material and then gives a direct indication of hardness via dial. Cheaper and easier than Brinell.

Rockwell Hardness Scale - Measures the Indentation hardness of materials through the depth of penetration of an indenter, loaded on a material sample and compared to the penetration in some reference material. Its chief advantage is its ability to display hardness values directly, thus eliminating tedious calculations involved other hardness measurement techniques. Also, the relatively simple and inexpensive set-up enables its installation in college laboratories. It is typically used in engineering and metallurgy and is most common in the USA. Its commercial popularity arises from its speed, reliability, robustness, resolution and small area of indentation.

Rockwell Hardness Testing - Rockwell hardness testing is a general method for measuring the bulk hardness of metallic and polymer materials. Rockwell hardness testing is an indentation testing method. An indenter is impressed into the test sample at a prescribed load to measure the material's resistance to deformation. A Rockwell hardness number is calculated from the depth of permanent deformation of the sample after application and removal of the test load.

RoHS - Restriction of Hazardous Substances. Sometimes pronounced Row-Hass or Rase in the industry. Restricts the use of certain plating materials such as cadmium and hexavalent chromate (used in Yellow Zinc products). An initiative (not a law) being driven by the European market through the electronics industry.

Rolled Thread - A thread produced by the action of a form tool which presses the material and radially displaces it to form threads.

Root - The bottom of the groove between the two flanking thread surfaces whether internal or external

Runout - The portion at the end of a threaded shank which is not cut or rolled to full depth, but which provides a transition between full depth threads and the fastener shank or head.

Saline - A solution containing salt. The presence of a saline solution creates a highly corrosive environment for metal since it will act as an electrolyte (e.g. salt water).

Scatter (Torque) - The space of intervals over which a series of torque values occur when compared to one another. The difference between various torque values.

Shear Force - A force that is applied perpendicular to the fasteners axis. Caused by two adjacent parts moving parallel to one another, in opposite directions.

Shear Plane - The two dimensional plane through which two adjacent materials move parallel to one another, in opposite directions.

Shear Strength - The maximum load that can be supported prior to fracture when applied at a right angle to the fastener's

axis. Defined in PSI as the load in pounds to cause rupture divided by the cross sectional area in square inches of the part along the rupture plane.

Shear, Single - A joint occurring when there is a load occurring in one transverse plane.

Shear, Double - A joint occurring when there is a load applied in two planes where the fastener could be broken into three pieces.

Sherardizing - A cementation process where zinc dust is heated to a temperature near its molten point and is brought into intimate contact with the steel surface to form an iron and zinc coating on the steel by diffusion.

Shot Peening - A metal surface treatment intended to extend the fatigue life of fasteners by impacting the surface of the fastener with small spherical media that helps dents that help prevent fatigue cracks from forming.

Silicon Bronze - Bronze with silicon added for corrosion resistance.

Spheroidized Steels - A steel that has been heat treated in such a way as to produce a spherodite microstructure (i.e. a microstructure with small spheres of cemetite surrounded by a sea of ferrite in the iron; as opposed to layers of cementite).

Stainless Steel - A family of iron-based alloys that must contain at least 10.5% chromium. The presence of chromium creates an invisible surface film that resists oxidation and makes the material "passive" or corrosion resistant. Other elements, such as nickel or molybdenum are added to increase corrosion resistance, strength or heat resistance.

17-4PH Stainless Steel - A chromium nickel grade of stainless steel. It may be hardened by single low-temperature heat treatment, which gives it excellent mechanical properties at a high-strength level while minimizing scaling and distortion. Often used in aircraft or similar parts requiring intricate machining, extensive welding, and/or where distortion in conventional hear treatment is a problem.

Stainless Steel, Austenitic - Also called 18-8 or 300 series. Most common stainless steel (over 80% of stainless steel fasteners are 300 series). They are highly corrosion resistant due to the presence of 18% chromium and 8% nickel. Austenitic stainless steels have a FCC structure due to the concentration of nickel in the steel. Non-hardenable by heat treatment. Common grades all 300 series.

Stainless Steel, Ferritic - Corrosion resistant steel which contains 12%-18% chromium, little to no nickel, and less than 0.2% carbon. Magnetic and non-hardenable by heat treatment. Common Grades: 430

Stainless Steel, Duplex - Contains a mixed microstructure of austenite and ferrite (duplex) with the goal ratio being 50:50. Have superior strength and corrosion resistance when compared to austenitic stainless steel.

Stainless Steel, Martensitic - Corrosion resistant steel which contains 12%-I8% chromium, little to no nickel, and enough carbon to be heat treated. Is magnetic and hardenable by heat treatment. Common Grades: 410 & 416.

Stainless Steel, Precipitation Hardened - Stainless Steel that has the corrosion resistance of austenitic stainless steels and better strength characteristics than some of the martensitic grades. This is accomplished through complex and lengthy form of heat treatment called age-hardening (due to the time required to complete it). Common Grades: 17-4,17-7,630A,A286.

Standards - Documented agreements containing technical specifications and other precise criteria to be used as constants and define characteristics that ensure that materials, products, processes, and services are fit to their purpose.

Stress Corrosion - A particular type of condition where cracks are induced and propagated in a fastener under combined effects of stress and corrosive environments.

Stress Relaxation - The phenomenon that occurs when metals and other materials will continuously elongate when under high temperature and a constant load.

Stress Relieving - A heat treatment preformed to remove residual stress in cold worked parts.

Stripping - To damage or break the threads of a screw, nut, or bolt the teeth of a gear.

Substrate - Any material layer under another. In zinc electroplated fasteners, the steel fastener would be the substrate as it is covered by a layer of zinc.

Tempering - The process of heating a fastener after quenching to give it its final tensile strength and hardness.

Tensile Strength - The ultimate strength of a given, material, alloy, or product that determines how much load it can withstand before breaking. It is calculated by performing a tension test and determining at what tensile strength maximum load is reached.

Tension - A measure of tautness, or straight pull that is measured in pounds.

Tension Force - A force applied parallel to a fasteners axis.

Tension Joint - A joint with forces acting parallel to the fasteners axis.

Thermal Expansion - An increase in the volume of the bolt or joint when heated. The tendency of materials to lengthen or expand when put under high temperatures.

FASTENER TERMINOLOGY

Thread - The thread is the inclined plane that wraps around the cylinder for the fastener, a ridge of uniform section in the form of a helix on the external or internal surface of a cylinder.

Thread Fit - The measurement of allowances and tolerances and the measure of tightness or looseness between them.

Thread Pitch - The distance between corresponding points on adjacent threads. Used to designate threads in the Metric system.

Thread Profile, Thread Form - The configuration of the thread in an axial plane. A thread has three parts: the crest, root and flanks. Common thread forms: UN, UNR and UNJ.

Thread Series-The threads per inch for a given diameter of threaded fasteners. Three are common : UNC, UNF and 8-UN.

Thread Tolerance - The slight variation between the theoretically perfect threads and the unit of actual production that is allowed and expected. The total amount by which a specific dimension is permitted to vary.

Titanium - A silvery gray metal with high corrosion resistance against salt waters, chlorides, and many acids. It is strong, though light weight, and very expensive.

Torque - Any twisting or turning force applied to a fastener. The combination of the distance turned, and the amount of forced being used. Expressed in foot pounds.

Torque Control - Tightening a bolt to a specified degree of tightness.

Torque or Torsion Strength - Torque is the force used in twisting, such as tightening a fastener. Torsion strength is the amount of force needed to twist a fastener apart. Both measures consider the amount of pressure applied to the fastener and the length of the wrench used in the application.

Toughness - A material's ability to absorb impact or shock loading. Rarely a specification requirement.

TPI, Threads Per Inch - The number of threads contained in one inch of a threaded fasteners' length. Used to designate threads in the Unified System.

Ultimate Tensile Strength - The ultimate point at which a fastener can withstand load before breaking.

UNC (Unified Coarse) Threads - The coarse thread series UNC/UNRC is the most commonly used thread system used in the majority of screws, bolts and nuts. It is used for producing thread in low strength materials such as cast iron, mild steel, and softer copper alloys, aluminum etc. The coarse thread is also used for rapid assembly or disassembly.

UNEF (Unified Extra Fine) Threads - This is used when the length of engagement is smaller than the fine thread series. It is also applicable in all applications where the fine thread can be used.

UNF (Unified Fine) Threads - Have a larger minor diameter than UNC thread, which gives UNF fasteners slightly higher load-carrying and better torque locking capabilities that UNC fasteners of the same identical material and outside diameter. The fine threads have tighter manufacturing tolerances than UNC threads, and the smaller lead angle allows for finer tension adjustment.

UNJ - Unified thread form with a more heavily rounded root than UNR, causing the minor diameter to the external threads to increase. Therefore, UNJ specifies thread form for both internal and external threads. Commonly used in aerospace applications.

UNR - Unified Radiused root threads. Most common unified thread form. Not to be confused with the thread series UNC, UNF, UNEF , or 8-UN which designated pitch diameters as they relate to threads per inch rather than the form of the root and crests of the thread.

UNS (Unified Special) Threads - Unified threads of special diameters, pitches, and length of engagement.

UTS (Unified Thread Standard) - Specifies the standard thread form, series, class, allowance, tolerance, and designation for unified screw threads. This standard is currently controlled by ASME/ANSI in the United States.

Vickers - Hardness test and scale commonly used in the metric system. Measures a material resistance to indentation.

X-Designation - Designation used in structural bolting which indicates that the threads of the bolt must be excluded from the shear plane of the joint.

Yield Strength / Point - The point at which a fastener has become permanently elongated under stress and begins to loose its clamping force.

Zinc Clear - A plating that forms a carbonate film that greatly retards its corrosion rate in a normal atmosphere, which is similar to the aluminum oxide film that forms on aluminum that accounts for its low corrosion rate.

Zinc Yellow - Resembles bright brass but has iridescent streaks of color in it. Is a chromatic finish over zinc plate and offers good corrosion resistance.

WE HELP CREATE

LAKSHMI PRECISION SCREWS LTD.

CORPORATE OFFICE

- 46/1 Mile Stone, Northern Bye Pass, Hissar Road, Rohtak - 124 001 Haryana (INDIA)

Tel. : +91 -1262 - 248288 / 248289 /249920 - 21
Fax : + 91 - 1262 - 248297 / 249922

EXPORT OFFICE

- N.H. 10, Delhi Road, Kharawar By Pass, Rohtak, 124 001 Haryana (INDIA)

Tel. : +91 - 1262 - 305101, 305104, 305110
Fax : +91 - 1262 - 305111, 305112
URL : www.lpsindia.com
Email : rjain@lpsboi.com,
amit@lpsboi.com,
rahul@lpsboi.com